CATALOGUE 2023

PRICELIST n.128

OTER FIX

AQUA OTER

OTER FORGING

OTER®

HYDRAULIC & FIXING SYSTEM

CATALOGUE
2023
PRICELIST n.128

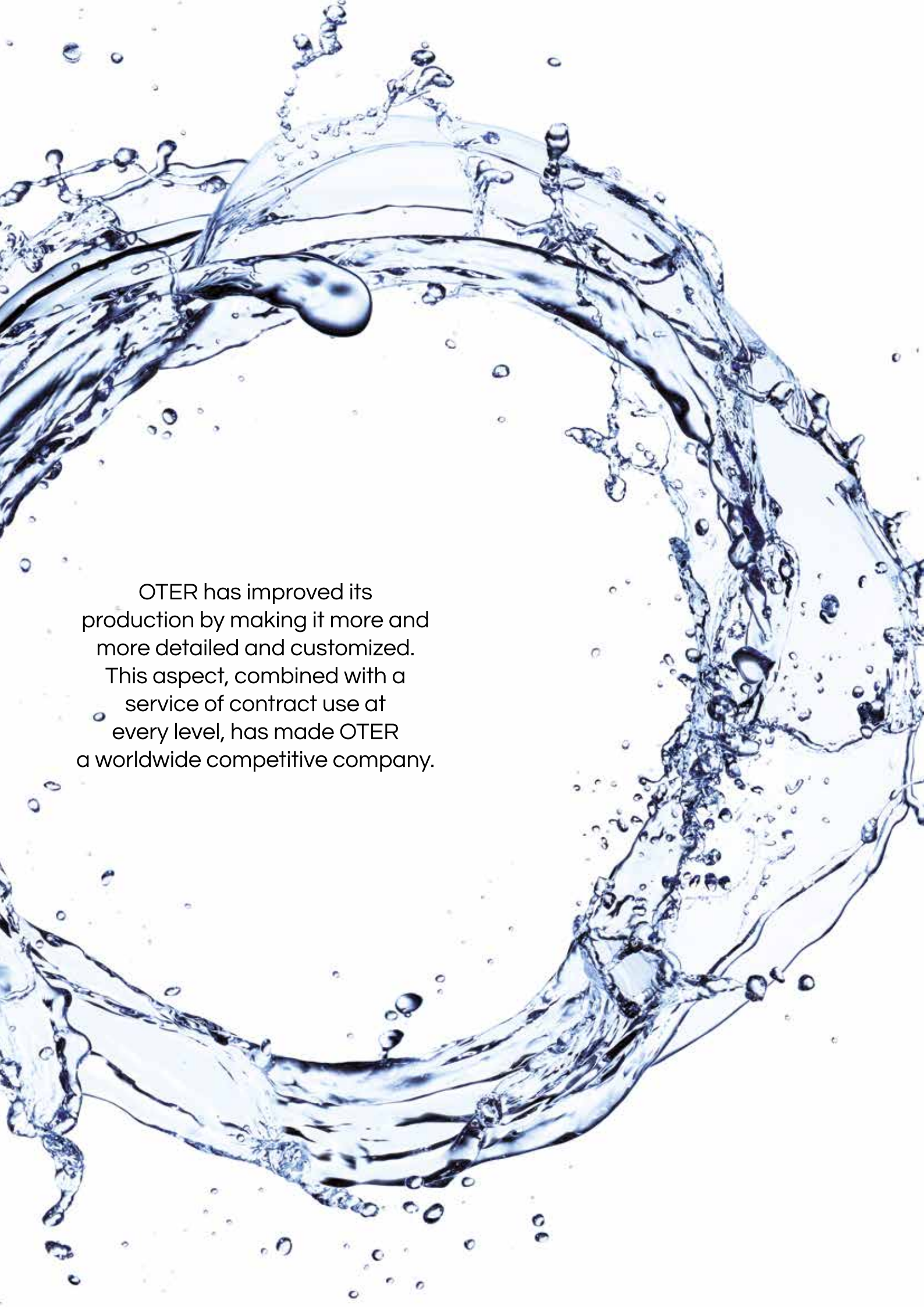

OTER has improved its production by making it more and more detailed and customized. This aspect, combined with a service of contract use at every level, has made OTER a worldwide competitive company.

Oteraccordi SpA
Via Bisone, 21
24034 Cisano Bergamasco (BG)

Tel. +39 035 78.23.42
Fax +39 035 78.36.22
info@oterspa.it - www.oterspa.it

Renato Tentori
President & global CEO
renato.tentori@oterspa.it

Diego Bonacina
General manager
diego.bonacina@oterspa.it
Tel. +39 035 43.87.112

Simona Bassani
Sales department export
simona.bassani@oterspa.it
export@oterspa.it
Tel. +39 035 43.87.115

Denise Assolari
Account Department
denise.assolari@osterspa.it
Tel. +39 035 43.87.124

Mariarosa Pepe
Technical office
mariarosa.pepe@oterspa.it
Tel. +39 035 43.87.109

OTER FIX

CLAMPS FOR PIPES Pag. 07

STAINLESS STEEL AISI (A2) CLAMPS FOR PIPES Pag. 57

LIGHT BRACKETING Pag. 69

HEAVY BRACKETING Pag. 87

STAINLESS STEEL AISI (A2) LIGHT BRACKETING Pag. 135

STAINLESS STEEL AISI (A2) HEAVY BRACKETING Pag. 147

SANITARY FIXING Pag. 159

PLASTERBOARD FIXING Pag. 179

RADIATOR FIXING Pag. 201

AIR CONDITION FIXING Pag. 215

FIXING DOWELS Pag. 221

AQUAOTER

RADIATOR FITTINGS Pag. 241

THREADED STEEL FITTINGS Pag. 263

WELDING FITTINGS Pag. 289

FLANGES Pag. 301

BRASS FITTINGS Pag. 319

INDEX FOR ARTICLE Pag. 348

SYMBOLS CAPTION Pag. 351

SALES CONDITIONS Pag. 352

note

CLAMPS
FOR PIPES

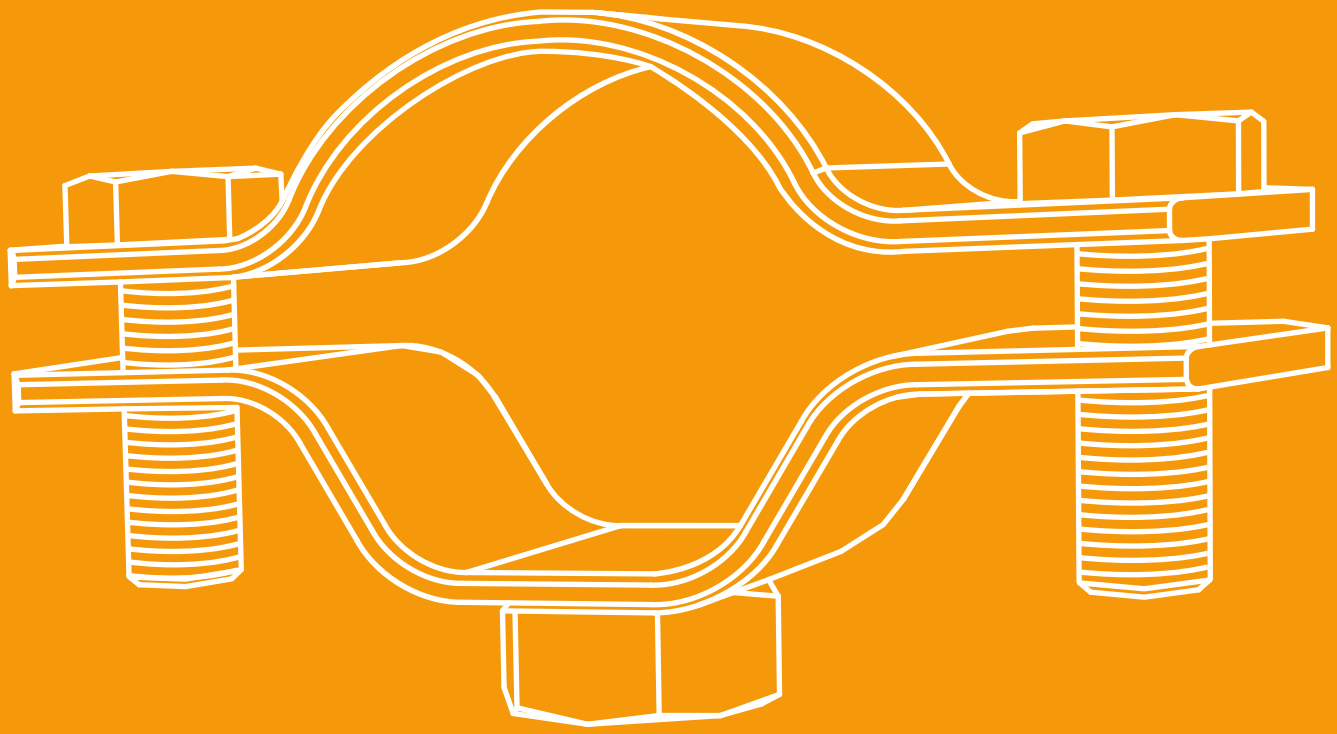

OTER FIX

08COLFI

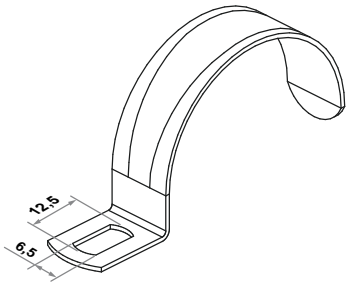

Light Clip

- Material : Fe P04 UNI EN 10130-91+A1-98
- Electrolytic galvanizing UNI ISO 2081:2018 sp. 6 ÷ 9 [µm]

USE: for wall fixing of light pipes.

CODICE	∅÷∅	[mm]		€ Each
80010	10÷11	14x1,2	100	**0,17**
80012	12÷13	14x1,2	100	**0,17**
80014	14÷15	14x1,2	100	**0,21**
80016	16÷17	14x1,2	100	**0,21**
80020	19÷20	14x1,2	100	**0,26**
80022	21÷22	14x1,2	100	**0,26**
80025	25÷26	14x1,2	100	**0,29**
80029	28÷30	14x1,2	100	**0,38**
80032	31÷32	15x1,8	100	**0,48**
80040	38÷40	15x1,8	100	**0,51**
80050	48÷50	15x1,8	50	**0,59**

Inside the packaging anchors are not included

805

08COLFI

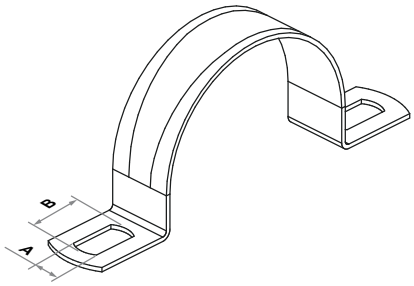

Light U Bolt

- Material : Fe P04 UNI EN 10130-91+A1-98
- Electrolytic galvanizing UNI ISO 2081:2018 sp. 6 ÷ 9 [µm]

USE: for wall fixing of light pipes.

CODICE	∅÷∅	[mm]	AxB[mm]		€ Each
80510	10÷11	10x0,9	Ø5	100	**0,16**
80512	12÷13	10x0,9	Ø5	100	**0,16**
80514	14÷15	10x0,9	Ø5	100	**0,16**
80516	16÷17	12x0,9	5x6,5	100	**0,21**
80520	19÷20	12x0,9	5x6,5	100	**0,26**
80522	21÷22	14x0,9	6,5x8,5	100	**0,26**
80525	25÷26	14x0,9	6,5x8,5	100	**0,30**
80529	28÷30	14x0,9	6,5x8,5	100	**0,32**
80532	31÷32	14x0,9	6,5x9	100	**0,36**
80540	38÷40	14x0,9	6,5x9	100	**0,45**
80550	48÷50	14x0,9	6,5x9	50	**0,52**

Inside the packaging anchors are not included

Oteraccordi S.p.A. reserves the right to change the information contained in this catalogue without notice.

820

08COLFI

Clip with screw and anchor

- Material: DD11 EN 10111
- Electrolytic galvanizing UNI ISO 2081:2018 sp. 6 ÷ 9 [µm]
- Nylon dowel

USE: for wall fixing of heavy pipes.

CODICE	Ø	[mm]				€ Each
82003	3/8"	20x2,5	10x50	6,3x50	5/100	**1,46**
82004	1/2"	20x2,5	10x50	6,3x50	5/100	**1,62**
82005	3/4"	20x2,5	10x50	6,3x50	5/100	**1,77**
82006	1"	20x2,5	10x50	6,3x50	5/100	**1,85**
82007	1.1/4"	30x2,5	10x50	8,0x60	5/50	**2,15**
82008	1.1/2"	30x2,5	10x50	8,0x60	5/50	**2,30**
82009	2"	30x2,5	10x50	8,0x60	5/50	**2,51**

821

08COLFI

Clip

- Material: DD11 EN 10111:2000
- Electrolytic galvanizing: UNI ISO 2081:2018 sp. 6 ÷ 9 [µm]

USE: for wall fixing of heavy pipes.

CODICE	Ø	[mm]	holes [mm] / plate		€ Each
82103	3/8"	20x2,5	18x8,5	5/100	**1,03**
82104	1/2"	20x2,5	18x8,5	5/100	**1,11**
82105	3/4"	20x2,5	18x8,5	5/100	**1,17**
82106	1"	20x2,5	18x8,5	5/100	**1,33**
82107	1.1/4"	30x2,5	18x8,5	5/50	**1,46**
82108	1.1/2"	30x2,5	18x8,5	5/50	**1,62**
82109	2"	30x2,5	18x8,5	5/50	**1,77**

Oteraccordi S.p.A. reserves the right to change the information contained in this catalogue without notice.

806

08COLFI

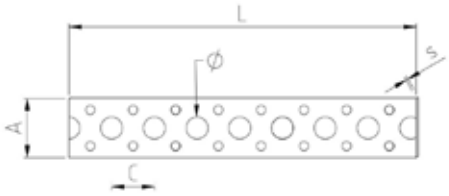

Holed strip

- Material: DX51D-ZF255 EN 10142
- White galvanization

CHARACTERISTICS: the particular shape of the flap allows it to adapt to any shape.
USE: quick and cheap way to block or support the pipes. Use the nail art. 806-01 with the punch art. 806-02.

CODICE	A x S x C x Ø [mm]	L [m]	[m]			€ Each
80612	12 x 0,7 x 9,0 x 5,0	10	10	57	10(*)	**18,77**
80617	17 x 0,7 x 12,0 x 6,3	10	10	81	10(*)	**19,51**

(*) Rolls/box

806-T

08COLFI

Tissue strip

- Material: Grey polypropylene

CHARACTERISTICS: the particular shape of the flap allows it to adapt to any shape.
USE: quick and cheap way to block or support the pipes. Use the nail art. 806-01 with the punch art. 806-02.

CODICE	[mm]	[m]			€ Each
80603	15x1,3	10	25	10(*)	**12,91**

(*) Rolls/box

Oteraccordi S.p.A. reserves the right to change the information contained in this catalogue without notice.

806-01

08COLFI

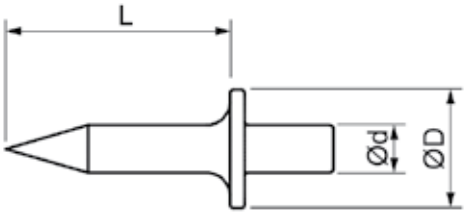

Nails

- Material: C72 steel HRC 52 ÷ 54

USE: designed for rapid installation on concrete without the need to perform any hole.

CODICE	Ød × ØD x L [mm]		€ Each
80619	4 x 10 x 19	200	0,16
80622	4 x 10 x 22	200	0,23

806-02

08COLFI

Hammer punch

- Material: C72 steel

CHARACTERISTICS: stopped magnetized nail, made according to the safety regulations at work.
USE: Tool designed to fit the nail art. 806-01.

CODICE		€ Each
80602	1	133,75

Oteraccordi S.p.A. reserves the right to change the information contained in this catalogue without notice.

810

08COLFI

LIGHT PIPE CLAMP WITH PIN AND ANCHOR

- Material: Fe P04 UNI EN 10130-91+A1-98
- Nylon dowel
- Electrolytic galvanizing UNI ISO 2081:2018 sp. 6 ÷ 9 [µm]

CHARACTERISTICS: both parts that make up the clamp are assembled and the entrance has 6MA thread.
USE: for fixing multilayer pipes and light pipes.

CODICE	Ø	[mm]					€ Each
81010	10	SS:11x1,0 - SI:13x1,2	M6	M6x45	6x30	10/100	**0,87**
81012	12	SS:11x1,0 - SI:13x1,2	M6	M6x45	6x30	10/100	**0,87**
81014	14	SS:11x1,0 - SI:13x1,2	M6	M6x45	6x30	10/100	**0,87**
81016	15-16	SS:11x1,0 - SI:13x1,2	M6	M6x45	6x30	10/100	**0,87**
81018	18-3/8"	SS:11x1,0 - SI:13x1,2	M6	M6x45	6x30	10/100	**0,88**
81020	20	SS:11x1,0 - SI:13x1,2	M6	M6x45	6x30	10/100	**0,92**
81022	22-1/2"	SS:11x1,0 - SI:13x1,2	M6	M6x45	6x30	10/100	**0,92**
81024	24	SS:11x1,0 - SI:13x1,2	M6	M6x45	6x30	10/100	**1,00**
81026	26	SS:11x1,0 - SI:13x1,2	M6	M6x45	6x30	10/100	**1,00**
81028	28	SS:11x1,0 - SI:13x1,2	M6	M6x45	6x30	10/100	**1,01**
81032	32	SS:11x1,0 - SI:13x1,2	M6	M6x45	6x30	5/100	**1,11**
81035	35	SS:11x1,0 - SI:13x1,2	M6	M6x45	6x30	5/100	**1,14**
81042	42-1.1/4"	SS:10x0,9 - SI:13x1,2	M6	M6x45	6x30	5/100	**1,18**
81050	50-1.1/2"	SS:12x0,9 - SI:16x1,2	M6	M6x45	6x30	5/100	**1,24**
81060	60-2"	SS:12x0,9 - SI:16x1,2	M6	M6x45	6x30	5/100	**1,42**

SS = UPPER BRACKET **SI = LOWER BRACKET**

Oteraccordi S.p.A. reserves the right to change the information contained in this catalogue without notice.

811

08COLFI

Copper pipe clamp with pin and anchor

- Clamp material: Cu-DHP R2 with 6MA entrance thread
- Nylon dowel
- Copper locking screw AISI 304
- Copper pin AISI 304

CHARACTERISTICS: both parts that make up the clamp are assembled
USE: for fixing copper pipes.

CODICE	Ø	[mm]					€ Each
81110	10	SS:10x0,9 - SI:13x1,2	M6	M6x45	6x30	10/100	3,13
81112	12	SS:10x0,9 - SI:13x1,2	M6	M6x45	6x30	10/100	3,22
81114	14	SS:10x0,9 - SI:13x1,2	M6	M6x45	6x30	10/100	3,32
81116	15÷16	SS:10x0,9 - SI:13x1,2	M6	M6x45	6x30	10/100	3,32
81118	18-3/8"	SS:10x0,9 - SI:13x1,2	M6	M6x45	6x30	10/100	3,37
81122	22-1/2"	SS:10x0,9 - SI:13x1,2	M6	M6x45	6x30	10/100	3,56
81128	28-3/4"	SS:10x0,9 - SI:13x1,2	M6	M6x45	6x30	10/100	3,73
81135	35	SS:10x0,9 - SI:13x1,2	M6	M6x45	6x30	5/100	4,42
81138	38	SS:10x0,9 - SI:13x1,2	M6	M6x45	6x30	5/100	6,00
81142	42	SS:12x0,9 - SI:16x1,2	M6	M6x45	6x30	5/100	6,09
81154	54	SS:12x0,9 - SI:16x1,2	M6	M6x45	6x30	5/100	7,40

SS = UPPER BRACKET **SI = LOWER BRACKET**

811-01

08COLFI

Kit pin and anchor for copper pipe

- Material: Copper PIN AISI 304
- Copper plating sp. 6 ÷ 8 [µm]

CHARACTERISTICS: Extension with double thread.
USE:ideal for walls with coat.

CODICE			€ Each
81145	M6x45	10/100	3,24
81176	M6x76	10/100	3,59
81190	M6x90	10/100	3,74

Oteraccordi S.p.A. reserves the right to change the information contained in this catalogue without notice.

813

08COLFI

Chrome plated copper pipe clamp with pin and anchor

- Clamp material: Cu-DHP R2
- Nylon dowel
- Chromium plating UNI EN 1456:2018 sp. 6 ÷ 8 [µm]

USE: specific for fastening chromed copper pipes .

CODICE	Ø	[mm]					€ Each
81310	10	SS:10x0,9 - SI:13x1,2	M6	6x45	6x30	10/100	**3,98**
81312	12	SS:10x0,9 - SI:13x1,2	M6	6x45	6x30	10/100	**4,27**
81314	14	SS:10x0,9 - SI:13x1,2	M6	6x45	6x30	10/100	**4,56**

840

08COLFI

Nylon pipe clamp

- Clamp material : Nylon
- Screw material : Steel 4.8 galvanized with dome head

CHARACTERISTICS: for fixing light weight pipes and cable holder pipes.
USE: suitable for supporting steel and copper pipes.In order to fix the clamp is necessary to drill a hole in the base material and beat the supplied screw with a hammer.

CODICE	Ø	[mm]			€ Each
84010	10	6	4x45	10/250	**0,68**
84012	12	6	4x45	10/250	**0,78**
84014	14	6	4x45	10/250	**0,79**
84015	15	6	4x45	10/250	**0,89**
84016	16	6	4x45	10/250	**0,91**
84018	18	8	5x60	10/250	**1,03**
84020	20	8	5x60	10/250	**1,14**
84022	22	8	5x60	10/250	**1,25**
84025	25	10	5x80	5/100	**1,98**
84028	28	10	5x80	5/100	**2,28**
84032	32	10	5x80	5/100	**2,51**

Oteraccordi S.p.A. reserves the right to change the information contained in this catalogue without notice.

08COLFI

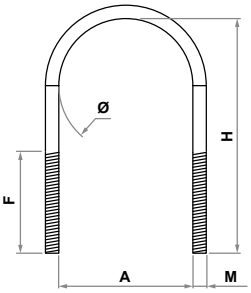

U Bolt with nuts and washers

- Material: S235JR EN 10025-Fe 430
- Electrolytic galvanizing UNI ISO 2081:2018 sp. 6 ÷ 9 [µm]

CHARACTERISTICS: in the package are included No. 2 galvanized hexagonal nuts UNI 5588 class 8 and No. 2 galvanized flat washers UNI 6592 class 100HV .
Custom performing non-standard measures.
USE: for fixing pipes on light profile30x15 and 32x20.

CODICE	Ø	M x F	H x A [mm]		€ Each
82503	3/8"	M6 x 19	37 x 18	100	1,46
82504	1/2"	M6 x 25	43 x 22	100	1,55
82505	3/4"	M6 x 25	47 x 27	100	1,62
82506	1"	M6 x 25	55 x 34	100	1,69
82507	1.1/4"	M6 x 25	63 x 43	100	1,77
82508	1.1/2"	M8 x 40	85 x 50	100	2,36
82509	2"	M8 x 40	97 x 61	100	2,58
82510	2.1/2"	M8 x 40	113 x 77	50	4,28
82511	3"	M8 x 40	126 x 89	20	4,57
82512	3.1/2"	M8 x 35	130 x 102	20	5,10
82513	4"	M8 x 35	142 x 115	20	6,15
82514	5"	M8 x 35	169 x 140	20	8,34
82515	6"	M10 x 45	202 x 168	20	11,27
82516	8"	M10 x 45	254 x 220	10	15,77

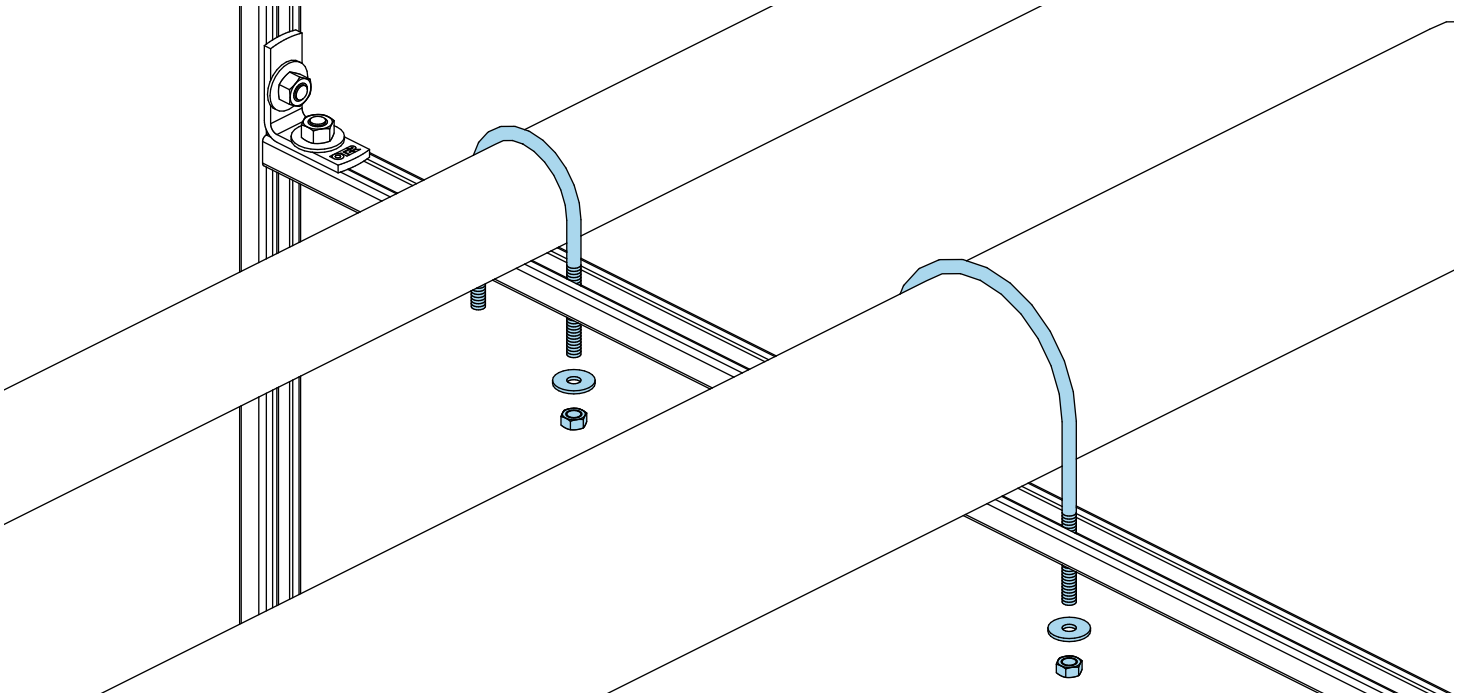

Oteraccordi S.p.A. reserves the right to change the information contained in this catalogue without notice.

828

08COLFI

CLAMP WITH PIN AND DOWEL

- Material: DD11 EN 10111
- Electro - galvanization UNI ISO 2081:2018 th. 6 ÷ 9 [µm]

CHARACTERISTICS: Electrowelded mounting clamp, supplied with ELTEX dowel and packed in double plastc bag.
USE: for fixing steel pipes and for all kind of pipes.

CODICE	Ø	∅÷∅	[mm]					€ Each
82803	3/8"	16÷20	20x2,0	M8	180	10x60	100	**0,82**
82804	1/2"	20÷24	20x2,0	M8	180	10x60	100	**0,85**
82805	3/4"	25÷30	20x2,0	M8	180	10x60	100	**0,87**
82806	1"	32÷36	20x2,0	M8	180	10x60	100	**0,88**
82807	1.1/4"	38÷44	20x2,0	M8	180	10x60	50	**0,99**
82808	1.1/2"	46÷50	20x2,0	M8	180	10x60	50	**1,02**
82809	2"	58÷62	20x2,0	M8	180	10x60	50	**1,10**

Oteraccordi S.p.A. reserves the right to change the information contained in this catalogue without notice.

08COLFI

Heavy pipe clamp with pin and anchor

- Material: DD11 EN 10111
- Electrolytic galvanizing UNI ISO 2081:2018 sp. 6 ÷ 9 [µm]

CHARACTERISTICS: attachment clamp electrowelded projection, supplied with universal nylon dowel and packed in single plastic bag.
USE: indicated for fixing steel pipes but usable for all kind of pipes .

CODICE	Ø	∅÷∅	[mm]						€ Each
83003	3/8"	16÷20	20x2,5	M8	M8x80	10x50	350	100	**1,34**
83004	1/2"	20÷24	20x2,5	M8	M8x80	10x50	350	100	**1,34**
83005	3/4"	25÷30	20x2,5	M8	M8x80	10x50	350	100	**1,41**
83006	1"	32÷36	20x2,5	M8	M8x80	10x50	350	100	**1,45**
83007	1.1/4"	38÷44	20x2,5	M8	M8x80	10x50	350	50	**1,62**
83008	1.1/2"	46÷50	20x2,5	M8	M8x80	10x50	350	50	**1,69**
83009	2"	58÷62	20x2,5	M8	M8x80	10x50	350	50	**1,93**
83010	2.1/2"	74÷80	30x2,5	M10	M10x100	12x60	350	25	**3,85**
83011	3"	84÷89	30x2,5	M10	M10x100	12x60	350	25	**4,17**
83013	4"	112÷118	30x2,5	M10	M10x100	12x60	350	25	**4,65**
83014	5"	134÷138	30x2,5	M10	M10x100	12x60	400	25	**7,06**
83015	6"	164÷172	30x2,5	M10	M10x100	12x60	400	25	**7,72**

Oteraccordi S.p.A. reserves the right to change the information contained in this catalogue without notice.

835

08COLFI

Heavy pipe clamp

• Material: DD11 EN 10111
• Electrolytic galvanizing UNI ISO 2081:2018 sp. 6 ÷ 9 [µm]

CHARACTERISTICS: attachment clamp electrowelded projection, and packed in single plastic bag.
USE: indicated for fixing steel pipes but usable for all kind of pipes .

CODICE	Ø	∅÷∅	[mm]				€ Each
83503	3/8"	16÷20	20x2,5	M8	350	100	**1,11**
83504	1/2"	20÷24	20x2,5	M8	350	100	**1,11**
83505	3/4"	25÷30	20x2,5	M8	350	100	**1,15**
83506	1"	32÷36	20x2,5	M8	350	100	**1,17**
83507	1.1/4"	38÷44	20x2,5	M8	350	50	**1,29**
83508	1.1/2"	46÷50	20x2,5	M8	350	50	**1,36**
83509	2"	58÷62	20x2,5	M8	350	50	**1,50**
83510	2.1/2"	74÷80	30x2,5	M10	350	25	**3,07**
83511	3"	84÷89	30x2,5	M10	350	25	**3,31**
83513	4"	112÷118	30x2,5	M10	350	25	**3,68**
83514	5"	134÷138	30x2,5	M10	400	25	**6,16**
83515	6"	164÷172	30x2,5	M10	400	25	**6,59**

P.S. For 8" clamp see our art.cod. M30015 on page 37

829

08COLFI

Light pipe clamp with pin and anchor

• Material: DD11 EN 10111
• Electrolytic galvanizing UNI ISO 2081:2018 sp. 6 ÷ 9 [µm]

CHARACTERISTICS: it's supplied with universal nylon dowel for all basic materials ,attachment clamp electrowelded projection and packed in single plastic bag.
USE: indicated for fixing steel pipes but usable for all kind of pipes .

CODICE	Ø	∅÷∅	[mm]						€ Each
82910	2.1/2"	74÷80	20x2,5	M8	M8x80	10x50	150	25	**3,39**
82911	3"	84÷89	20x2,5	M8	M8x80	10x50	150	25	**3,63**
82913	4"	112÷118	20x2,5	M8	M8x80	10x50	150	25	**4,10**

Oteraccordi S.p.A. reserves the right to change the information contained in this catalogue without notice.

08COLFI

UNHOOK PIPE CLAMP WITH PIN AND ANCHOR

- Material: DD11 EN 10111
- Electrolytic galvanizing UNI ISO 2081:2018 sp. 6 ÷ 9 [µm]

CHARACTERISTICS: attachment collar electrowelded to the projection, the knurling present on the false washer incorporated into the hexagonal head of the screw prevents accidental unscrewing due, for example,to the effect of the vibrations.Supplied with universal nylon dowel and packed in single plastic bag.
USE: indicated for fixing steel pipes but usable for all kind of pipes .

CODICE	Ø	∅÷∅	[mm]						€ Each
83103	3/8"	16÷20	20x2,5	M8	M8X80	10x50	300	100	**1,56**
83104	1/2"	20÷24	20x2,5	M8	M8X80	10x50	300	100	**1,56**
83105	3/4"	25÷30	20x2,5	M8	M8X80	10x50	300	100	**1,64**
83106	1"	32÷36	20x2,5	M8	M8X80	10x50	300	100	**1,73**
83107	1.1/4"	38÷44	20x2,5	M8	M8X80	10x50	300	50	**1,80**
83108	1.1/2"	46÷50	20x2,5	M8	M8X80	10x50	300	50	**1,85**
83109	2"	58÷62	20x2,5	M8	M8X80	10x50	300	50	**2,05**
83110	2.1/2"	74÷80	30x2,5	M10	M10x100	12x60	350	25	**3,92**
83111	3"	84÷89	30x2,5	M10	M10x100	12x60	350	25	**4,00**
83113	4"	112÷118	30x2,5	M10	M10x100	12x60	350	25	**4,39**

Oteraccordi S.p.A. reserves the right to change the information contained in this catalogue without notice.

890

08COLFI

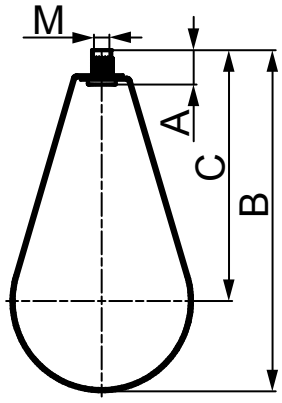

Pipe clamp for sprinkler installation

- Material: S235JR EN 10025
- galvanizing Sendzimir UNI EN 10142:2002 sp. 19 ÷ 21 [µm]

CHARACTERISTICS: They are approved FM.
USE: specific for fire-fighting systems installation.

CODICE	∅ [inch]	▱ [mm]	⌒	A [mm]	B [mm]	C [mm]	📦	€ Each
89006	1"	25x1,2	M10	22	75	57,5	50	**4,56**
89007	1.1/4"	25x1,2	M10	22	86	64	50	**4,40**
89008	1.1/2"	25x1,2	M10	22	99	74	50	**5,14**
89009	2"	25x1,2	M10	22	116	85	50	**5,50**
89010	2.1/2"	25x1,2	M10	22	135	96,5	50	**8,68**
89011	3"	25x1,2	M10	22	159	114	25	**8,83**
89013	4"	32x1,5	M10	22	219	161	25	**12,46**
89014	5"	32x1,5	M12	26,5	247	177	25	**14,99**
89015	6"	32x1,5	M12	26,5	284	199,5	25	**16,93**
89016	8"	40x2,0	M16	24	373	261	25	**26,24**

Oteraccordi S.p.A. reserves the right to change the information contained in this catalogue without notice.

834

08COLFI

Light pipe clamp with double adapter

- Material: DC01 EN 10130
- Electrolytic galvanizing UNI ISO 2081:2018 sp. 6 ÷ 9 [µm]

CHARACTERISTICS: attachment collar electrowelded projection with double thread nut, pre-assembled in the box with lock mounting screws.
USE: indicated to support steel and copper pipes

CODICE	Ø	∅÷∅	[mm]				€ Each
83402	3/8"	15÷19	20x1,5	M8/M10	150	150	**1,94**
83403	1/2"	21÷23	20x1,5	M8/M10	150	100	**1,94**
83404	3/4"	25÷28	20x1,5	M8/M10	150	100	**2,04**
83405	1"	32÷36	20x1,5	M8/M10	150	75	**2,13**
83406	1.1/4"	38÷43	20x1,5	M8/M10	150	50	**2,46**
83407	1.1/2"	44÷49	20x1,5	M8/M10	150	50	**2,79**
83409	-	50÷56	20x1,5	M8/M10	150	50	**2,88**
83410	2"	57÷61	20x1,5	M8/M10	150	50	**3,09**
83411	-	63÷70	20x1,5	M8/M10	150	25	**3,27**
83412	2.1/2"	70÷77	20x1,5	M8/M10	150	25	**3,49**
83414	-	80÷83	20x1,5	M8/M10	150	25	**4,24**
83415	3"	83÷91	20x2,0	M8/M10	200	25	**4,69**
83417	-	93÷99	20x2,0	M8/M10	200	25	**5,03**
83419	3.1/2"	100÷106	20x2,0	M8/M10	200	25	**5,22**
83420	4"	108÷114	20x2,0	M8/M10	300	25	**5,99**
83422	-	123÷128	25x2,5	M8/M10	300	25	**8,27**
83423	-	131÷136	25x2,5	M8/M10	300	25	**8,72**
83424	5"	137÷146	25x2,5	M8/M10	300	25	**10,04**
83426	-	200÷206	25x2,5	M8/M10	300	15	**15,02**
83427	8"	210÷219	25x2,5	M8/M10	300	10	**16,36**

Oteraccordi S.p.A. reserves the right to change the information contained in this catalogue without notice.

833-G

08COLFI

ISOPHONIC PIPE CLAMP WITH PIN AND ANCHOR

- Material: DD11 EN 10111
- Electrolytic galvanizing UNI ISO 2081:2018 sp. 6 ÷ 9 [µm]

CHARACTERISTICS: electrowelded collar attachment projection, the inner lining is in EPDM.Supplied with nylon dowel and packed in a single plastic bag.
USE: with internal isophonic insulation firmly fixed to the tape to support wall and ceiling pipes.

CODICE	Ø	∅÷∅	[mm]						€ Each
83303	3/8"	16÷20	20x2,5	M8	M8x80	10x50	350	50	**3,33**
83304	1/2"	20÷24	20x2,5	M8	M8x80	10x50	350	50	**3,33**
83305	3/4"	25÷30	20x2,5	M8	M8x80	10x50	350	50	**3,71**
83306	1"	32÷36	20x2,5	M8	M8x80	10x50	350	50	**4,32**
83307	1.1/4"	38÷44	20x2,5	M8	M8x80	10x50	350	25	**4,74**
83308	1.1/2"	46÷50	20x2,5	M8	M8x80	10x50	350	25	**5,31**
83309	2"	58÷62	20x2,5	M8	M8x80	10x50	350	25	**5,98**
83310	2.1/2"	74÷80	30x2,5	M10	M10x100	12x60	350	10	**10,20**
83311	3"	84÷89	30x2,5	M10	M10x100	12x60	350	10	**10,93**
83313	4"	112÷118	30x2,5	M10	M10x100	12x60	350	10	**13,12**
84824	5"	137÷142	25x2,5	M10	M10x100	12x60	300	10	**13,88**
84825	6"	159÷165	25x2,5	M10	M10x100	12x60	300	10	**14,72**
84827	8"	210÷219	25x2,5	M10	M10x100	12x60	300	5	**20,32**

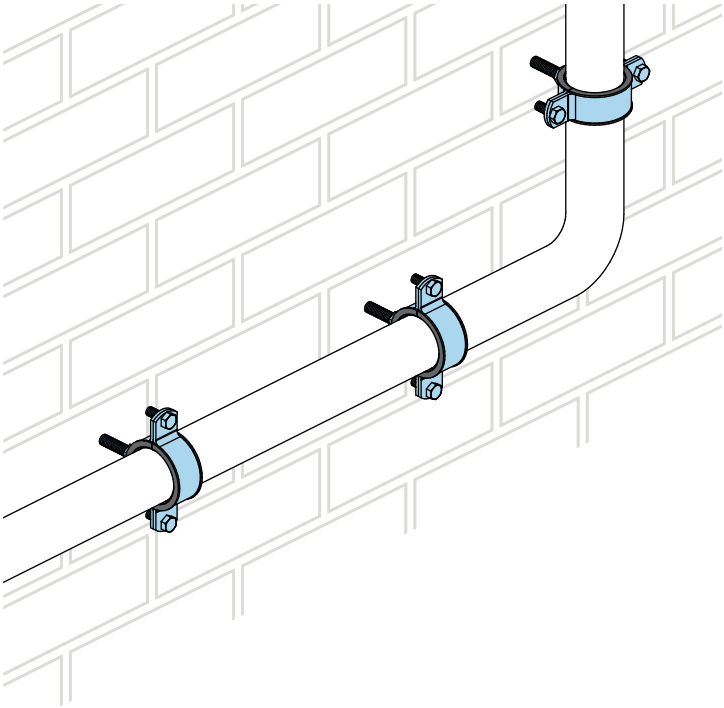

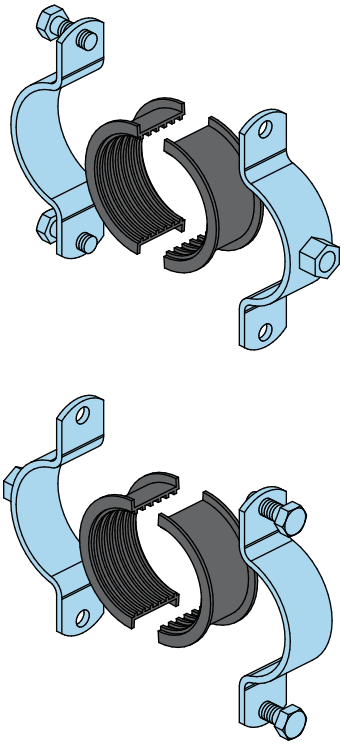

Oteraccordi S.p.A. reserves the right to change the information contained in this catalogue without notice.

838-G

08COLFI

Isophonic pipe clamp

- Material: DD11 EN 10111
- Electrolytic galvanizing UNI ISO 2081:2018 sp. 6 ÷ 9 [µm]

CHARACTERISTICS: electrowelded collar attachment projection, the inner lining is in EPDM. Packed in a single plastic bag.
USE: with internal isophonic insulation firmly fixed to the tape to support wall and ceiling pipes.

CODICE	Ø	∅÷∅	[mm]				€ Each
83803	3/8"	16÷20	20x2,5	M8	350	50	**3,11**
83804	1/2"	20÷24	20x2,5	M8	350	50	**3,11**
83805	3/4"	25÷30	20x2,5	M8	350	50	**3,48**
83806	1"	32÷36	20x2,5	M8	350	50	**4,09**
83807	1.1/4"	38÷44	20x2,5	M8	350	25	**4,54**
83808	1.1/2"	46÷50	20x2,5	M8	350	25	**5,08**
83809	2"	58÷62	20x2,5	M8	350	25	**5,68**
83810	2.1/2"	74÷80	30x2,5	M10	350	10	**9,86**
83811	3"	84÷89	30x2,5	M10	350	10	**10,46**
83813	4"	112÷118	30x2,5	M10	350	10	**12,58**
84624	5"	137÷142	25x2,5	M10	300	20	**10,17**
84625	6"	159÷165	25x2,5	M10	300	20	**11,96**
84627	8"	210÷219	25x2,5	M10	300	10	**16,87**

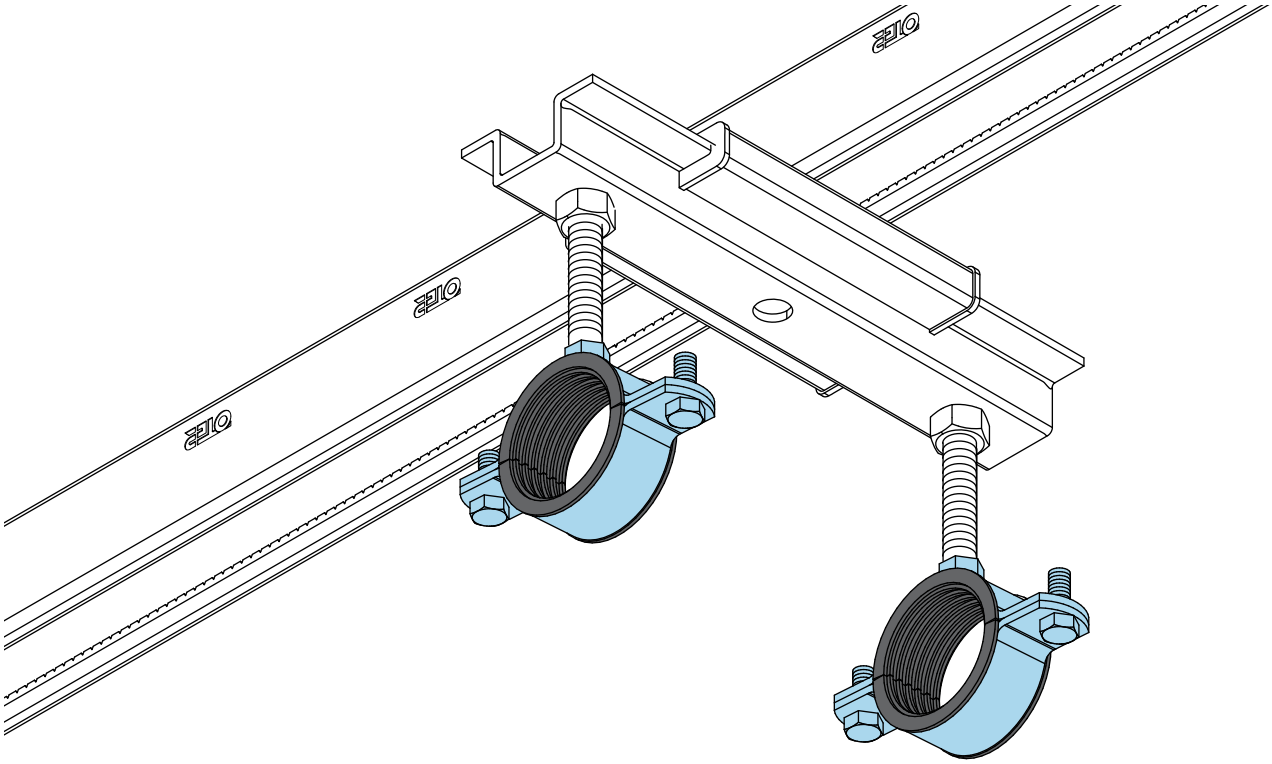

Oteraccordi S.p.A. reserves the right to change the information contained in this catalogue without notice.

843

08COLFI

ISOPHONIC PIPE CLAMP WITH ONE SCREW

- Material: DD11 EN 10111
- Electrolytic galvanizing UNI ISO 2081:2018 sp. 6 ÷ 9 [µm]

CHARACTERISTICS: electrowelded collar attachment projection .The inner lining is in PVC. Rapid closing with a single screw
USE: indicated for supporting steel and copper pipes

CODICE	Ø	∅÷∅	[mm]				€ Each
84301	1/4"	12÷14	20x1,25	M8	100	150	**1,57**
84302	3/8"	15÷19	20x1,25	M8	100	100	**1,57**
84303	1/2"	20÷23	20x1,25	M8	100	100	**1,65**
84304	3/4"	25÷28	20x1,25	M8	100	100	**1,94**
84305	1"	32÷35	20x1,25	M8	100	75	**2,10**
84306	1.1/4"	40÷43	20x1,25	M8	100	50	**2,17**
84307	1.1/2"	44÷49	20x1,25	M8	100	50	**2,26**
84309	-	50÷55	20x1,25	M8	100	50	**2,46**
84310	2"	57÷61	20x1,25	M8	100	50	**2,91**
84311	-	63÷67	20x1,25	M8	100	50	**3,05**
84313	2.1/2"	74÷80	20x1,25	M8	100	25	**3,74**
84316	-	90÷93	20x1,50	M8	170	25	**4,38**
84320	4"	108÷114	20x1,50	M8	170	25	**6,28**

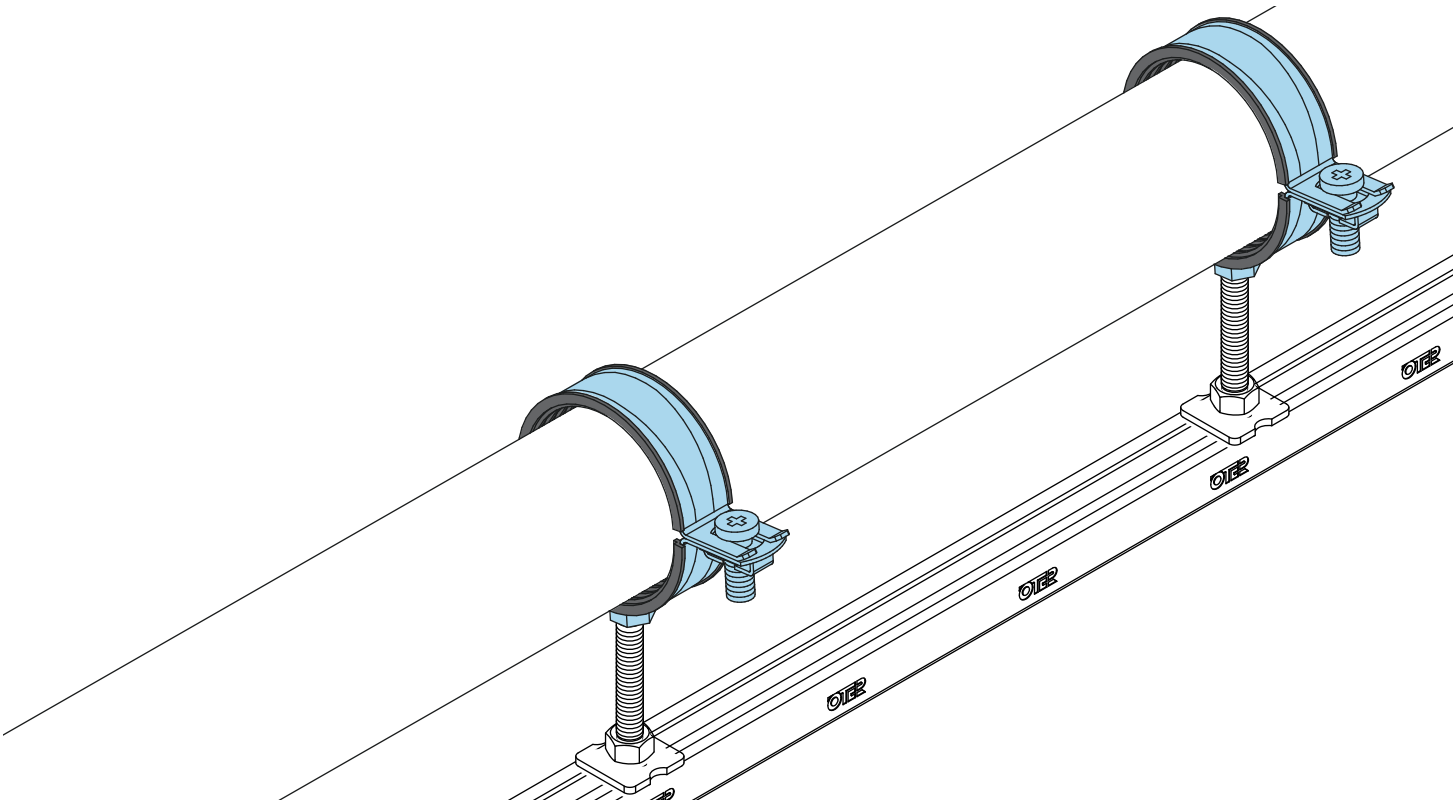

Oteraccordi S.p.A. reserves the right to change the information contained in this catalogue without notice.

08COLFI

ISOPHONIC PIPE CLAMP

- Material: DD11 EN 10111
- Electrolytic galvanizing UNI ISO 2081:2018 sp. 6 ÷ 9 [µm]

CHARACTERISTICS: the 4 mm insulating material thickness is isophonic and firmly attached to tape. Temperature of use -40°C ÷ +100°C, electrowelded collar attachment projection with double thread nut, two locking screws with stop screws mounting and pre-assembled in the box.
USE: indicated to support steel and copper pipes.

CODICE	Ø	∅÷∅	[mm]				€ Each
84601	1/4"	12÷14	20x1,25	M8/M10	150	150	**1,67**
84602	3/8"	15÷19	20x1,25	M8/M10	150	150	**1,67**
84603	1/2"	20÷23	20x1,25	M8/M10	150	100	**1,73**
84604	3/4"	25÷28	20x1,25	M8/M10	150	100	**1,82**
84605	1"	32÷35	20x1,25	M8/M10	150	75	**2,02**
84606	1.1/4"	40÷43	20x1,25	M8/M10	150	50	**2,17**
84607	1.1/2"	44÷49	20x1,25	M8/M10	150	50	**2,46**
84608	-	48÷53	20x1,25	M8/M10	150	50	**2,46**
84609	-	50÷55	20x1,25	M8/M10	150	50	**3,03**
84610	2"	57÷61	20x1,50	M8/M10	200	50	**3,63**
84611	-	63÷67	20x1,50	M8/M10	200	25	**3,27**
84612	-	70÷73	20x1,50	M8/M10	200	25	**3,46**
84613	2.1/2"	74÷80	20x1,50	M8/M10	200	25	**3,70**
84615	3"	83÷91	20x1,50	M8/M10	200	20	**4,50**
84618	3.1/2"	96÷101	20x1,50	M8/M10	200	20	**4,68**
84619	-	101÷106	20x1,50	M8/M10	200	20	**4,82**
84620	4"	108÷114	20x1,50	M8/M10	300	20	**5,07**
84621	-	115÷116	20x2,00	M10	300	20	**6,78**
84622	-	123÷128	20x2,00	M10	300	20	**7,19**
84623	-	131÷135	20x2,00	M10	300	20	**7,94**
84624	5"	137÷142	25x2,50	M10	300	20	**10,17**
84625	6"	159÷165	25x2,50	M10	300	20	**11,96**
84626	-	200÷206	25x2,50	M10	300	15	**16,87**
84627	8"	210÷219	25x2,50	M10	300	10	**16,87**

Oteraccordi S.p.A. reserves the right to change the information contained in this catalogue without notice.

848

08COLFI

ISOPHONIC PIPE CLAMP WITH PIN AND ANCHOR

- Material: DD11 EN 10111
- Electrolytic galvanizing UNI ISO 2081:2018 sp. 6 ÷ 9 [µm]

CHARACTERISTICS: electrowelded collar attachment projection with double thread nut, two locking screws with stop screws mounting and pre-assembled in the box.The inner lining is in PVC
USE:suitable to support steel and copper pipes

CODICE	Ø	∅÷∅	[mm]						€ Each
84802	3/8"	15÷19	20x1,25	M8/M10	M8x80	10x50	150	150	**2,71**
84803	1/2"	20÷23	20x1,25	M8/M10	M8x80	10x50	150	100	**2,76**
84804	3/4"	25÷28	20x1,25	M8/M10	M8x80	10x50	150	100	**2,87**
84805	1"	32÷35	20x1,25	M8/M10	M8x80	10x50	150	75	**3,01**
84806	1.1/4"	40÷43	20x1,25	M8/M10	M8x80	10x50	150	50	**3,24**
84807	1.1/2"	44÷49	20x1,25	M8/M10	M8x80	10x50	150	50	**3,45**
84808	-	48÷53	20x1,25	M8/M10	M8x80	10x50	150	50	**3,51**
84810	2"	57÷61	20x1,50	M8/M10	M8x80	10x50	200	50	**3,99**
84813	2.1/2"	74÷80	20x1,50	M8/M10	M10x100	12x60	200	25	**5,16**
84815	3"	83÷91	20x1,50	M8/M10	M10x100	12x60	200	20	**5,60**
84818	3.1/2"	96÷101	20x1,50	M8/M10	M10x100	12x60	200	20	**6,19**
84820	4"	108÷114	20x1,50	M8/M10	M10x100	12x60	300	20	**6,54**
84824	5"	137÷142	25x2,50	M10	M10x100	12x60	300	10	**13,88**
84825	6"	159÷165	25x2,50	M10	M10x100	12x60	300	10	**14,72**
84827	8"	210÷219	25x2,50	M10	M10x100	12x60	300	5	**20,32**

Oteraccordi S.p.A. reserves the right to change the information contained in this catalogue without notice.

08COLFI

Isophonic collar with double M8/M10 connection

- Material: DC01/DD11
- Electro-galvanization UNI ISO 2081:2018 th. 6 ÷ 9 [µm]
- Working temperature -30° C + 120°C
- Soundproofing according to standard DIN 4109
- Noise reducing according to standard ISO 3822-1 till 21db (A)

CHARACTERISTICS: Electrowelded projection clamp with double thread nut, the internal coating is in EPDM. Two-screw clamp with quick closing mechanism for easy locking with one hand.
USE: for steel and copper pipes.

CODICE	Ø	∅÷∅	[mm]				€ Each
84902	3/8"	15÷19	20x1,25	M8/M10	40	50	**3,24**
84903	1/2"	20÷23	20x1,25	M8/M10	40	50	**3,57**
84904	3/4"	25÷28	20x1,25	M8/M10	40	50	**3,79**
84905	1"	31÷35	20x1,25	M8/M10	40	50	**4,06**
84906	1.1/4"	40÷45	20x1,25	M8/M10	40	25	**4,43**
84907	1.1/2"	48÷52	20x1,25	M8/M10	40	25	**4,87**
84909	-	54÷58	20x1,25	M8/M10	40	25	**5,19**
84910	2"	60÷64	20x1,25	M8/M10	40	25	**5,41**
84911	-	66÷70	20x1,50	M8/M10	40	25	**5,79**
84913	2.1/2"	75÷79	23x2,00	M8/M10	71,5	25	**6,16**
84915	3"	88÷91	23x2,00	M8/M10	71,5	25	**8,87**
84919	-	100÷105	23x2,00	M8/M10	123	10	**10,27**
84920	4"	108÷115	23x2,00	M8/M10	123	10	**10,82**
84924	5"	133÷140	23x2,00	M10	123	10	**13,19**
84925	6"	165÷169	23x2,50	M10	123	10	**18,39**

Oteraccordi S.p.A. reserves the right to change the information contained in this catalogue without notice.

839

08COLFI

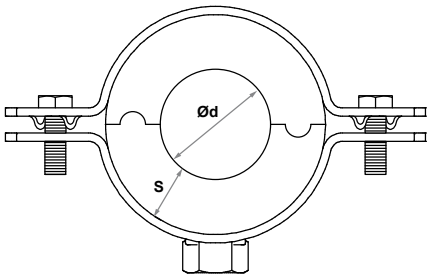

Heavy pipe clamp with K- Flex support

- Material: DD11 EN 10111
- Electrolytic galvanizing UNI ISO 2081:2018 sp. 6 ÷ 9 [µm]

CHARACTERISTICS: composed of two half-shells of insulating K-Flex ST, consisting of three layers:1) the inner layer in rigid PIR foam with closed cells,2) the intermediate layer of insulating K-Flex, 3) outer layer of PVC. Electrowelded Clamp attack projection. Packed in single plastic bag.
USE: ideal for the support of air conditioning and refrigeration pipes

CODICE	Ø	∅ [mm]	[mm]		Ax ØD x Ød x S		€ Each
83931	3/8"	18	20x1,50	M8/M10	18 x 13	10	**17,57**
83932	1/2"	22	20x1,50	M8/M10	22 x 13	10	**18,02**
83933	3/4"	28	20x1,50	M8/M10	28 x 13	10	**19,72**
83934	1"	35	20x1,50	M8/M10	35 x 13	10	**22,17**
83935	1.1/4"	42	20x1,50	M8/M10	42 x 13	10	**24,44**
83936	1.1/2"	48	20x1,50	M8/M10	48 x 13	10	**26,29**
83938	2"	60	20x1,50	M8/M10	60 x 13	10	**33,16**
83992	1/2"	22	20x1,50	M8/M10	22 x 19	10	**21,38**
83993	3/4"	28	20x1,50	M8/M10	28 x 19	10	**24,44**
83994	1"	35	20x1,50	M8/M10	35 x 19	10	**27,49**
83995	1.1/4"	42	20x1,50	M8/M10	42 x 19	10	**30,55**
83996	1.1/2"	48	20x2,00	M8/M10	48 x 19	10	**32,86**
83997	-	54	20x2,00	M8/M10	54 x 19	10	**38,20**
83998	2"	60	20x2,00	M8/M10	60 x 19	10	**38,57**
83999	-	64	20x2,00	M8/M10	64 x 19	10	**38,97**
83910	2.1/2"	76	20x2,00	M8/M10	76 x 19	5	**45,83**
83911	3"	89	25x2,50	M8/M10	89 x 19	5	**51,96**
83912	-	108	25x2,50	M8/M10	108 x 19	5	**62,65**
83913	4"	114	30x2,50	M10	114 x 19	5	**64,19**
83914	5"	139	30x2,50	M10	139 x 19	5	**119,18**
83915	6"	160	30x2,50	M10	160 x 19	5	**129,88**

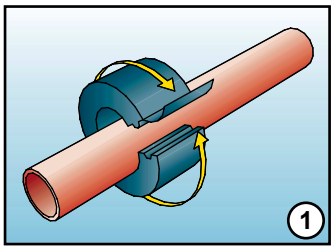

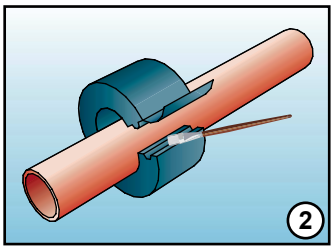

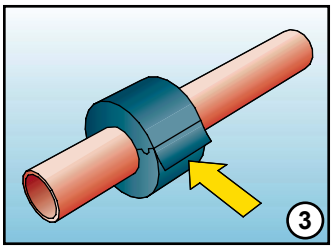

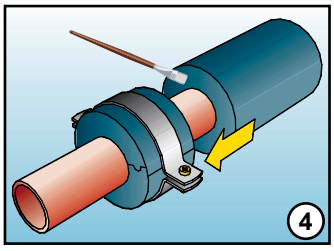

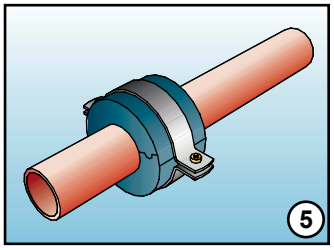

DATI TECNICI

Densità	60/80 kg/m³
Resistenza alla compressione	970 kPa
Temperatura di impiego	-180°C+120°C
Conduttività termica	λ 0 0,36 W/(mK) @ 10°C
Colore	nero
Assorbimento acqua	5%
Tolleranza diametro e spessore	+1 mm/±1 mm

Oteraccordi S.p.A. reserves the right to change the information contained in this catalogue without notice.

08COLFI

INTERLOCKING PIPE CLAMP FOR LIGHT RAIL

- Material: DD11 EN 10111
- Electrolytic galvanizing UNI ISO 2081:2018 sp. 6 ÷ 9 [µm]

USE: suitable for fixing steel pipes on profile in a sequential way.

CODICE	Ø	[mm]	mm				€ Each
85003	3/8"	25x2,0	30x15 - 32x20	300	40	50	**1,93**
85004	1/2"	25x2,0	30x15 - 32x20	300	40	50	**1,93**
85005	3/4"	25x2,0	30x15 - 32x20	300	40	50	**2,04**
85006	1"	25x2,0	30x15 - 32x20	300	40	50	**2,14**
85007	1.1/4"	25x2,0	30x15 - 32x20	300	40	50	**2,41**
85008	1.1/2"	25x2,0	30x15 - 32x20	300	40	50	**2,68**
85009	2"	25x2,0	30x15 - 32x20	300	40	50	**2,93**

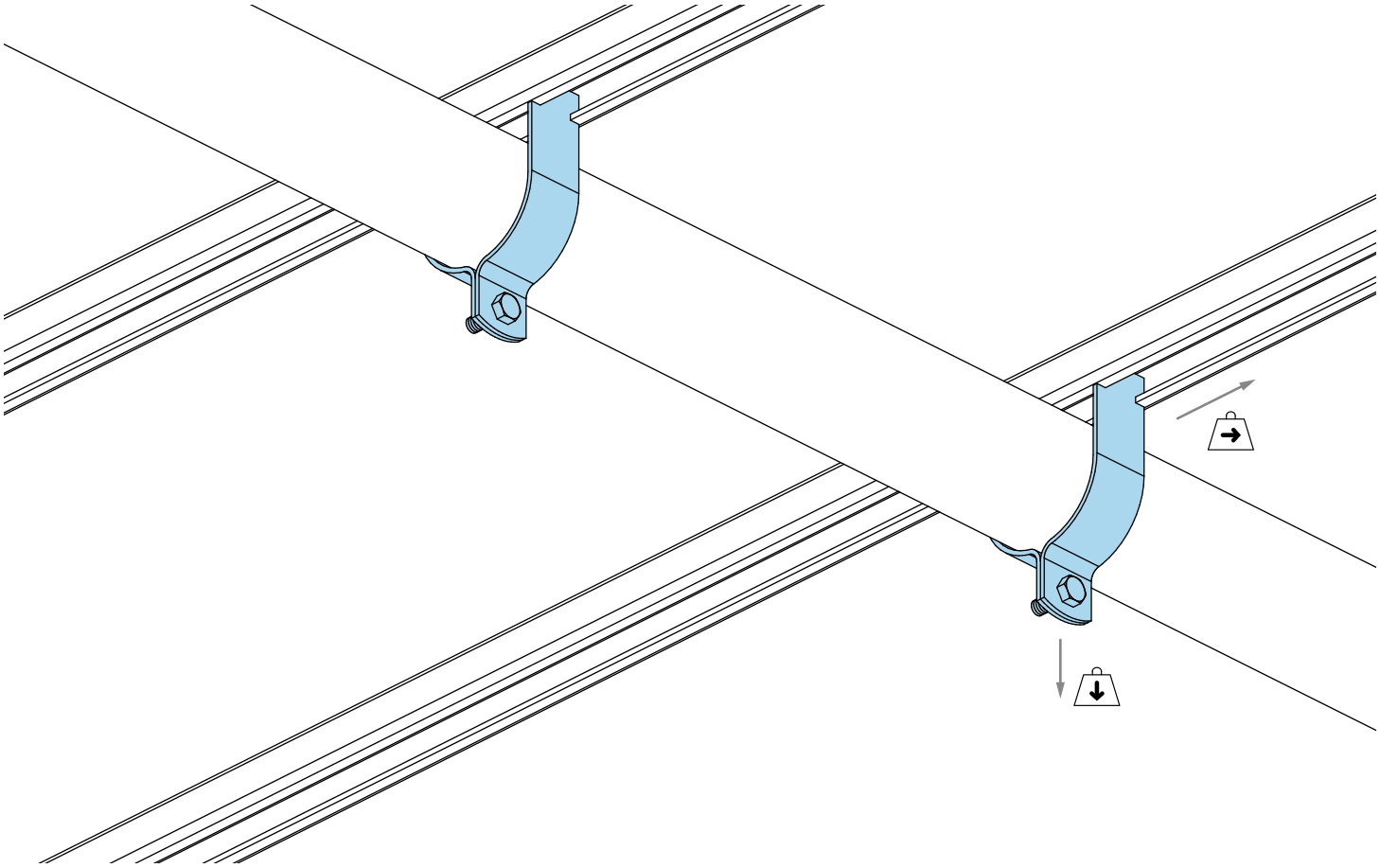

Oteraccordi S.p.A. reserves the right to change the information contained in this catalogue without notice.

851

08COLFI

INTERLOCKING PIPE CLAMP FOR HEAVY RAIL

- Material: DD11 EN 10111
- Electrolytic galvanizing UNI ISO 2081:2018 sp. 6 ÷ 9 [µm]

USE: suitable for fixing steel pipes on profile in a sequential way, ideal for quick mounting on all types of pipe.

CODICE	Ø	[mm]	mm				€ Each
85104	1/2"	30x2,0	41x21/41/61/82	400	60	20	**2,51**
85105	3/4"	30x2,0	41x21/41/61/82	400	60	20	**2,58**
85106	1"	30x2,0	41x21/41/61/82	400	60	20	**2,65**
85107	1.1/4"	30x2,0	41x21/41/61/82	400	60	20	**2,68**
85108	1.1/2"	30x2,0	41x21/41/61/82	400	60	20	**2,88**
85109	2"	30x2,0	41x21/41/61/82	400	60	20	**3,03**
85110	2.1/2"	30x2,0	41x21/41/61/82	400	60	20	**3,39**
85111	3"	30x2,0	41x21/41/61/82	400	60	20	**4,37**
85113	4"	30x2,0	41x21/41/61/82	400	60	10	**5,26**
85114	5"	30x2,0	41x21/41/61/82	400	60	10	**20,27**
85115	6"	30x2,0	41x21/41/61/82	400	60	10	**22,51**

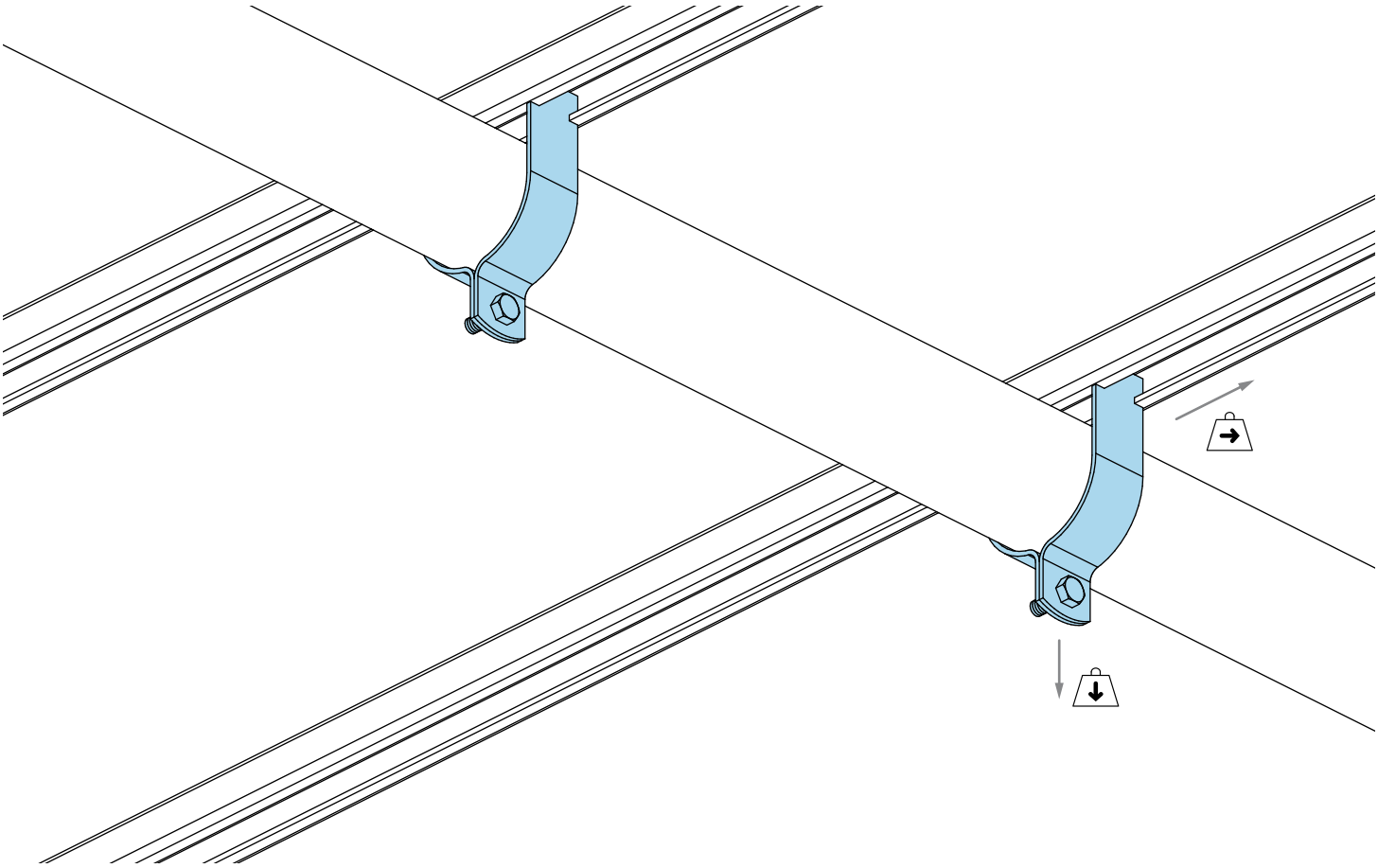

Oteraccordi S.p.A. reserves the right to change the information contained in this catalogue without notice.

860

08COLFI

Drain pipes clamp with pin and anchor

- Material: DC01 EN 10130

CHARACTERISTICS: supplied with nylon dowel suitable for all basic materials.
USE: to fix drainpipes.

CODICE	Ø	[mm]					€ Each
86002	80	27x0,8	M8	M8x80	10x50	25	2,93
86003	100	27x0,8	M8	M8x80	10x50	25	3,16
86005	120÷125	27x0,8	M8	M8x80	10x50	25	3,31

882

08COLFI

Clamp for flues with pin and anchor

- Material: DD11 EN 10111
- Electrolytic galvanizing UNI ISO 2081:2018 sp. 6 ÷ 9 [µm]
- Powder painting black RAL 9005 sp. 70 ÷ 80 [µm]

CHARACTERISTICS: supplied with nylon dowel suitable for all types of basic materials.
USE: to fix the flues of pellet stoves.

CODICE	Ø	[mm]						€ Each
88201	60	25x1,5	M8	M8x80	10x50	150	25	4,85
88202	80	25x1,5	M8	M8x80	10x50	150	25	5,03
88203	100	25x1,5	M8	M8x80	10x50	150	25	6,55

Oteraccordi S.p.A. reserves the right to change the information contained in this catalogue without notice.

883

08COLFI

PAINTED CLAMP FOR SMOKE PIPES WITH PIN AND ANCHOR

- Material: DD11 EN 10111
- Electrolytic galvanizing UNI ISO 2081:2018 sp. 6 ÷ 9 [µm]
- White powder painting RAL 9010 sp. 70 ÷ 80 [µm]

CHARACTERISTICS: supplied with nylon dowel suitable for all basic materials.
USE: to fix exhaust smoke pipes.

CODICE	Ø	[mm]						€ Each
88301	60	25x1,5	M8	M8x200	10x50	150	25	**4,85**
88302	80	25x1,5	M8	M8x200	10x50	150	25	**5,03**
88303	100	25x1,5	M8	M8x200	10x50	150	25	**6,55**
88304	110	25x1,5	M8	M8x200	10x50	150	25	**7,29**
88305	120	25x1,5	M8	M8x200	10x50	150	25	**8,01**
88306	125	25x1,5	M8	M8x200	10x50	150	25	**8,74**
88307	130	25x1,5	M8	M8x200	10x50	150	25	**9,43**
88308	140	25x1,5	M8	M8x200	10x50	150	25	**10,04**
88309	150	25x1,5	M8	M8x200	10x50	150	25	**10,80**
88310	160	25x1,5	M8	M8x200	10x50	150	25	**11,58**

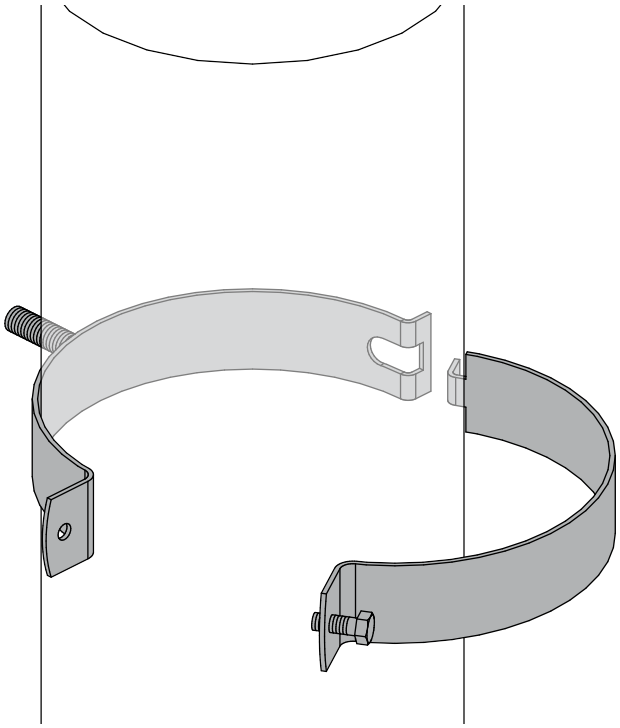

Oteraccordi S.p.A. reserves the right to change the information contained in this catalogue without notice.

880

08COLFI

GALVANIZED CLAMP FOR FLUES WITH PIN AND ANCHOR

- Material: DD11 EN 10111
- Electrolytic galvanizing UNI ISO 2081:2018 sp. 6 ÷ 9 [µm]

CHARACTERISTICS: supplied with nylon dowel suitable for all basic materials.
USE: to fix exhaust smoke pipes.

CODICE	Ø	[mm]						€ Each
88001	60	25x1,5	M8	M8x80	10x50	150	25	**2,88**
88002	80	25x1,5	M8	M8x80	10x50	150	25	**3,03**
88003	100	25x1,5	M8	M8x80	10x50	150	25	**3,24**
88004	110	25x1,5	M8	M8x80	10x50	150	25	**3,41**
88005	120	25x1,5	M8	M8x80	10x50	150	25	**3,95**
88006	125	25x1,5	M8	M8x80	10x50	150	25	**4,15**
88007	130	25x1,5	M8	M8x80	10x50	150	25	**4,79**
88008	140	25x1,5	M8	M8x80	10x50	150	25	**6,38**
88009	150	25x1,5	M8	M8x80	10x50	150	25	**6,99**
88010	160	25x1,5	M8	M8x80	10x50	150	25	**7,44**

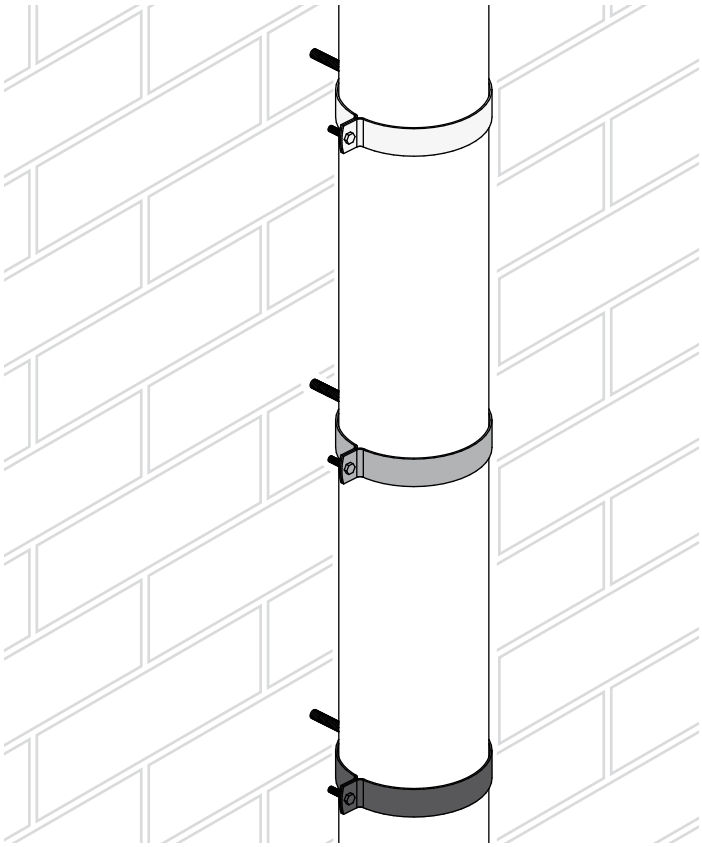

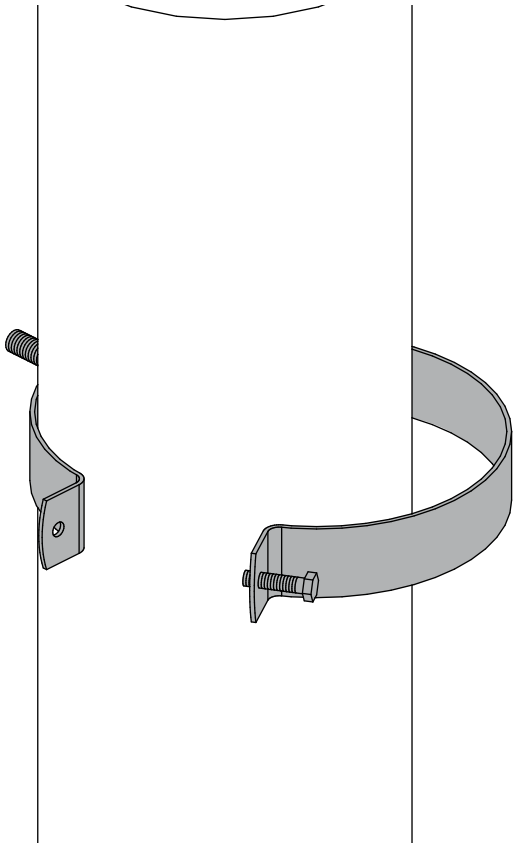

Oteraccordi S.p.A. reserves the right to change the information contained in this catalogue without notice.

1000

10COLTP

Clamp for polyetilene pipes with 1/2" and 1" attack

- Material: DD11 EN 10111
- Electrolytic galvanizing UNI ISO 2081:2018 sp. 6 ÷ 9 [µm]

CHARACTERISTICS: attachment collar electrowelded MIG-MAG. Packed in a single plastic bag.
USE: to fix polyethylene and PVC pipes

CODICE	Ø	[mm]				€ Each
M00414	200	40x4,0	1/2"	600	10	**22,53**
M00014	200	40x4,0	1"	600	10	**24,03**
M00415	220	40x4,0	1/2"	600	10	**24,03**
M00015	220	40x4,0	1"	600	10	**25,53**
M00416	250	40x4,0	1/2"	600	10	**26,29**
M00016	250	40x4,0	1"	600	10	**30,79**
M00417	315	40x4,0	1/2"	600	10	**31,24**
M00017	315	40x4,0	1"	600	10	**35,16**
M00018	400	40x4,0	1"	600	1	**106,27**
M00019	500(*)	50x6,0	1"	800	1	**196,77**
M00020	630(*)	50x6,0	1"	800	1	**214,79**

(*) always check availability and delivery times

Oteraccordi S.p.A. reserves the right to change the information contained in this catalogue without notice.

1030

10COLTP

Clamp for polyetilene pipes

• Material: DD11 EN 10111
• Electrolytic galvanizing UNI ISO 2081:2018 sp. 6 ÷ 9 [µm]

CHARACTERISTICS: attachment collar electrowelded MIG-MAG. Packed in a single plastic bag.
USE: to fix polyethylene and PVC pipes

CODICE	Ø	[mm]				€ Each
M30014	200	40x4,0	M10	600	10	**21,93**
M30614	200	40x4,0	M16	600	10	**22,08**
M30015	220	40x4,0	M10	600	10	**23,43**
M30615	220	40x4,0	M16	600	10	**23,72**
M30016	250	40x4,0	M10	600	10	**25,99**
M30616	250	40x4,0	M16	600	10	**26,29**
M30017	315	40x4,0	M10	600	10	**30,79**
M30617	315	40x4,0	M16	600	10	**31,54**
M30018	400	40x4,0	M10	600	1	**104,32**
M30618	400	40x4,0	M16	600	1	**108,17**

1040

10COLTP

Clamp for polyetilene pipes M10 attack

• Material: DD11 EN 10111
• Electrolytic galvanizing UNI ISO 2081:2018 sp. 6 ÷ 9 [µm]

CHARACTERISTICS: attachment collar electrowelded MIG-MAG. Supplied with nylon dowel .Packed in a single plastic bag.
USE: to fix polyethylene and PVC pipes.

CODICE	Ø	[mm]						€ Each
M40014	200	40x4,0	M10	M10x100	12x60	600	10	**25,09**
M40015	220	40x4,0	M10	M10x100	12x60	600	10	**26,75**
M40016	250	40x4,0	M10	M10x100	12x60	600	10	**29,90**
M40017	315	40x4,0	M10	M10x100	12x60	600	10	**34,54**

Oteraccordi S.p.A. reserves the right to change the information contained in this catalogue without notice.

1001

10COLTP

Isophonic pipe clamp

- Material: DD11 EN 10111
- Electrolytic galvanizing UNI ISO 2081:2018 sp. 6 ÷ 9 [µm]

CHARACTERISTICS: electrowelded collar attachment projection from diameter 40 to diameter 160,attachment welded collar MIG-MAG from diameter 200 to diameter 400.The inner lining is in PVC. Package in single bag, the spacer needs to create a sliding point.
USE: to fix polyethylene and PVC pipes.

CODICE	Ø	[mm]				€ Each
M01001	40(*)	30x2,5	1/2"	300	40	**6,46**
M01002	50(*)	30x2,5	1/2"	300	40	**6,91**
M01003	56(*)	30x2,5	1/2"	300	40	**7,07**
M01004	63(*)	30x2,5	1/2"	350	40	**7,20**
M01005	75(*)	30x2,5	1/2"	350	20	**8,04**
M01007	90(*)	30x2,5	1/2"	350	20	**8,64**
M01008	100(*)	30x2,5	1/2"	350	20	**9,34**
M01009	110(*)	30x2,5	1/2"	400	20	**9,47**
M01010	125(*)	30x2,5	1/2"	400	20	**10,52**
M01011	135(*)	30x2,5	1/2"	400	20	**11,86**
M01012	140(*)	30x2,5	1/2"	400	20	**12,16**
M01013	160(*)	30x2,5	1/2"	400	20	**13,08**
M01414	200	40x4,0	1/2"	600	10	**28,24**
M01014	200	40x4,0	1"	600	10	**28,84**
M01415	220	40x4,0	1/2"	600	10	**28,84**
M01015	220	40x4,0	1"	600	10	**30,03**
M01416	250	40x4,0	1/2"	600	10	**31,09**
M01016	250	40x4,0	1"	600	10	**32,60**
M01417	315	40x4,0	1/2"	600	10	**38,14**
M01017	315	40x4,0	1"	600	10	**43,25**
M01018	400	40x4,0	1"	600	1	**123,43**

(*) with spacer

Oteraccordi S.p.A. reserves the right to change the information contained in this catalogue without notice.

10COLTP

Isophonic pipe clamp

- Material: DD11 EN 10111
- Electrolytic galvanizing UNI ISO 2081:2018 sp. 6 ÷ 9 [µm]

CHARACTERISTICS: electrowelded collar attachment projection from diameter 40 to diameter 160, attachment welded collar MIG-MAG from diameter 200 to diameter 400.The inner lining is in PVC. Package in single bag, the spacer needs to create a sliding point.
USE: to fix polyethylene and PVC pipes.

CODICE	Ø	[mm]				€ Each
M31001	40(*)	30x2,5	M10	300	40	**5,71**
M31002	50(*)	30x2,5	M10	300	40	**5,86**
M31003	56(*)	30x2,5	M10	300	40	**6,15**
M31004	63(*)	30x2,5	M10	350	40	**6,31**
M31005	75(*)	30x2,5	M10	350	20	**6,91**
M31007	90(*)	30x2,5	M10	350	20	**8,19**
M31008	100(*)	30x2,5	M10	350	20	**8,78**
M31009	110(*)	30x2,5	M10	400	20	**9,25**
M31010	125(*)	30x2,5	M10	400	20	**10,13**
M31011	135(*)	30x2,5	M10	400	20	**10,43**
M31012	140(*)	30x2,5	M10	400	20	**10,82**
M31013	160(*)	30x2,5	M10	400	20	**11,71**
M31014	200	40x4,0	M10	600	10	**27,78**
M31614	200	40x4,0	M16	600	10	**28,37**
M31015	220	40x4,0	M10	600	10	**29,31**
M31615	220	40x4,0	M16	600	10	**30,01**
M31016	250	40x4,0	M10	600	10	**31,54**
M31616	250	40x4,0	M16	600	10	**32,26**
M31017	315	40x4,0	M10	600	10	**38,61**
M31617	315	40x4,0	M16	600	10	**39,22**
M31018	400	40x4,0	M10	600	1	**100,84**
M31618	400	40x4,0	M16	600	1	**45,07**

(*) with spacer

Oteraccordi S.p.A. reserves the right to change the information contained in this catalogue without notice.

1041

10COLTP

Isophonic clamp with pin and Anchor

- Material: DD11 EN 10111
- Electrolytic galvanizing UNI ISO 2081:2018 sp. 6 ÷ 9 [µm]

CHARACTERISTICS: electrowelded collar attachment projection from diameter 40 to diameter 160, attachment welded collar MIG-MAG from diameter 200 to diameter 400.The inner lining is in PVC.Supplied with nylon dowel, packed in single bag and the spacer needs to create a sliding point.
USE: to fix polyethylene and PVC pipes.

CODICE	Ø	[mm]						€ Each
M41001	40(*)	30x2,5	M10	M10x100	12x60	200	40	**6,46**
M41002	50(*)	30x2,5	M10	M10x100	12x60	200	40	**6,77**
M41003	56(*)	30x2,5	M10	M10x100	12x60	200	40	**7,07**
M41004	63(*)	30x2,5	M10	M10x100	12x60	350	40	**7,20**
M41005	75(*)	30x2,5	M10	M10x100	12x60	350	20	**8,04**
M41007	90(*)	30x2,5	M10	M10x100	12x60	350	20	**9,08**
M41008	100(*)	30x2,5	M10	M10x100	12x60	350	20	**10,07**
M41009	110(*)	30x2,5	M10	M10x100	12x60	400	20	**10,43**
M41010	125(*)	30x2,5	M10	M10x100	12x60	400	20	**11,19**
M41011	135(*)	30x2,5	M10	M10x100	12x60	400	20	**11,80**
M41012	140(*)	30x2,5	M10	M10x100	12x60	400	20	**11,80**
M41013	160(*)	30x2,5	M10	M10x100	12x60	400	10	**13,23**

(*) with spacer

Oteraccordi S.p.A. reserves the right to change the information contained in this catalogue without notice.

10COLTP

"Open-Closed" clamp for polyetilene pipes

- Material: DD11 EN 10111
- Electrolytic galvanizing UNI ISO 2081:2018 sp. 6 ÷ 9 [µm]

CHARACTERISTICS: patented system " OPEN-CLOSED " to achieve the fixed and mobile point. OPEN: it allows the sliding of pipe and CLOSED:it allows the locking of the pipe. Electrowelded collar attachment projection. Package in single plastic bag.

USE: to fix polyethylene and PVC pipes.

CODICE	Ø	[mm]				€ Each
D00001	40	30x2,5	1/2"	400	50	**3,50**
D00002	50	30x2,5	1/2"	400	50	**3,67**
D00003	56	30x2,5	1/2"	400	50	**3,74**
D00004	63	30x2,5	1/2"	400	50	**4,06**
D00005	75	30x2,5	1/2"	400	25	**4,28**
D00007	90	30x2,5	1/2"	400	25	**4,51**
D00008	100	30x2,5	1/2"	400	25	**4,87**
D00009	110	30x2,5	1/2"	400	25	**4,97**
D00010	125	30x2,5	1/2"	400	25	**5,30**
D00012	140	30x2,5	1/2"	450	25	**5,93**
D00013	160	30x2,5	1/2"	450	25	**6,41**

PUNTO SCORREVOLE

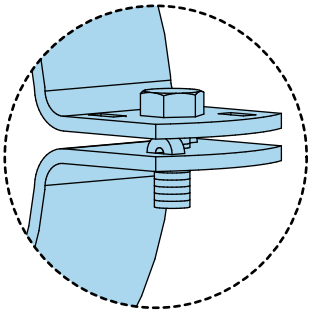

PUNTO FISSO

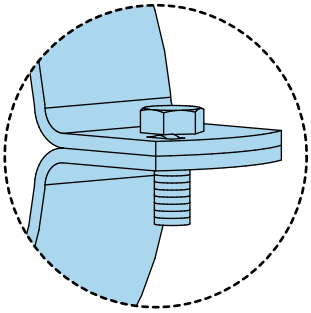

Oteraccordi S.p.A. reserves the right to change the information contained in this catalogue without notice.

2030

10COLTP

"Open-Closed" clamp for polyetilene pipes M10 attack

- Material: DD11 EN 10111
- Electrolytic galvanizing UNI ISO 2081:2018 sp. 6 ÷ 9 [µm]

CHARACTERISTICS: patented system " OPEN-CLOSED " to achieve the fixed and mobile point. OPEN:it allows the sliding of pipe and CLOSED:it allows the locking of the pipe.Electrowelded collar attachment projection. Package in single plastic bag.

USE: to fix polyethylene and PVC pipes.

CODICE	Ø	[mm]				€ Each
D30001	40	30x2,5	M10	400	50	**2,82**
D30002	50	30x2,5	M10	400	50	**2,97**
D30003	56	30x2,5	M10	400	50	**3,13**
D30004	63	30x2,5	M10	400	50	**3,30**
D30005	75	30x2,5	M10	400	25	**3,50**
D30007	90	30x2,5	M10	400	25	**3,76**
D30008	100	30x2,5	M10	400	25	**3,93**
D30009	110	30x2,5	M10	400	25	**4,07**
D30010	125	30x2,5	M10	400	25	**4,64**
D30012	140	30x2,5	M10	450	25	**4,97**
D30013	160	30x2,5	M10	450	25	**5,59**

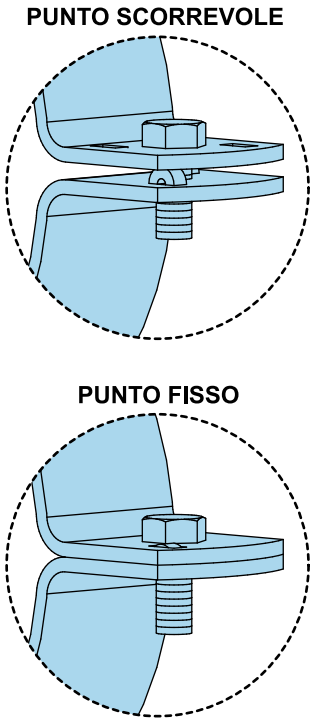

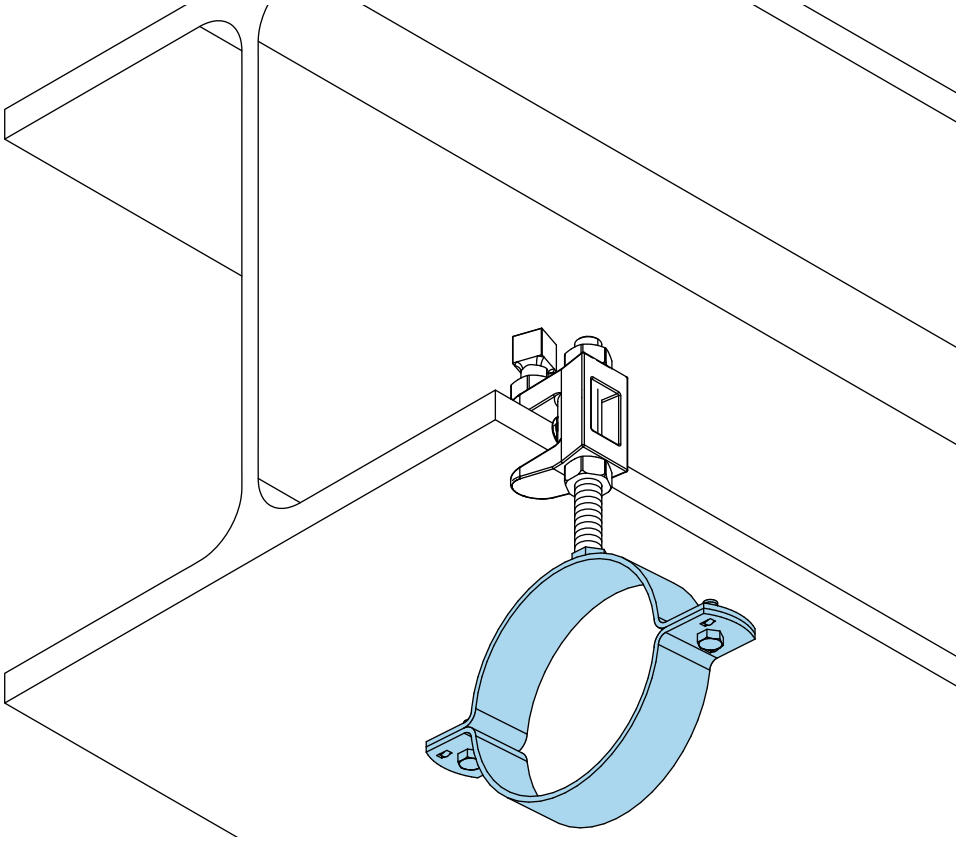

Oteraccordi S.p.A. reserves the right to change the information contained in this catalogue without notice.

2040

10COLTP

"Open-Closed" clamp for polyetilene pipes M10 attack with pin and anchor

- Material: DD11 EN 10111
- Electrolytic galvanizing UNI ISO 2081:2018 sp. 6 ÷ 9 [µm]

CHARACTERISTICS: patented system " OPEN-CLOSED " to achieve the fixed and mobile point. OPEN:it allows the sliding of pipe and CLOSED:it allows the locking of the pipe.Electrowelded collar attachment projection, supplied with nylon dowel and packed in single plastic bag.

USE: to fix polyethylene and PVC pipes.

CODICE	Ø	[mm]						€ Each
D40001	40	30x2,5	M10	M10x100	12x60	400	50	**3,67**
D40002	50	30x2,5	M10	M10x100	12x60	400	50	**3,75**
D40003	56	30x2,5	M10	M10x100	12x60	400	50	**3,75**
D40004	63	30x2,5	M10	M10x100	12x60	400	50	**4,21**
D40005	75	30x2,5	M10	M10x100	12x60	400	25	**4,37**
D40007	90	30x2,5	M10	M10x100	12x60	400	25	**4,51**
D40008	100	30x2,5	M10	M10x100	12x60	400	25	**4,80**
D40009	110	30x2,5	M10	M10x100	12x60	400	25	**4,87**
D40010	125	30x2,5	M10	M10x100	12x60	400	25	**5,36**
D40012	140	30x2,5	M10	M10x100	12x60	450	25	**6,24**
D40013	160	30x2,5	M10	M10x100	12x60	450	25	**6,69**

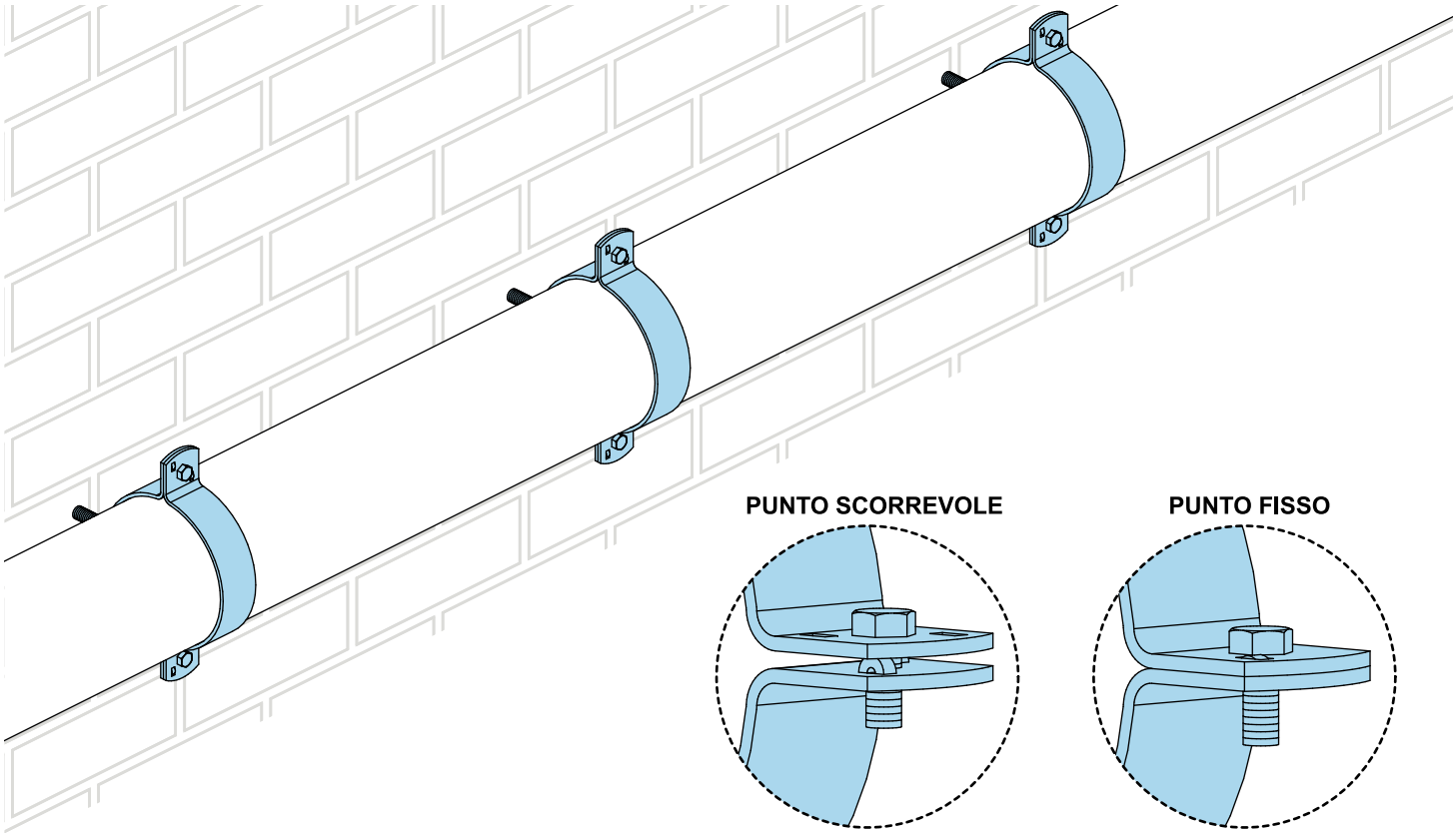

Oteraccordi S.p.A. reserves the right to change the information contained in this catalogue without notice.

857-Z

08COLFI

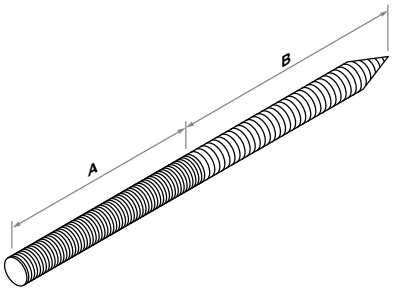

Anchoring kit for pipe clamp

- Material: S235JR EN 10025
- Electrolytic galvanizing UNI ISO 2081:2018 sp. 6 ÷ 9 [µm]

CHARACTERISTICS: pin supplied with nylon dowel and hexagonal nut , packed in single plastic bag.
USE: for installation of collars directly to wall or ceiling.

CODICE			AxB[mm]		€ Each
85701	M8x80	10x50	30x50	100	**0,91**
85702	M8x90	10x50	30x50	100	**1,19**
85703	M8x200	10x50	120x80	50	**2,21**
85704	M10x100	12x60	40x60	50	**1,36**
85705	M10x120	12x60	50x60	50	**1,50**
85706	M10x140	12x60	60x80	50	**1,65**
85707	M10x180	12x60	60x120	50	**2,58**
85708	M10x220	12x60	75x145	50	**4,09**
85709	M12x100	14x75	25x45	50	**0,00**

Oteraccordi S.p.A. reserves the right to change the information contained in this catalogue without notice.

914

08COLFI

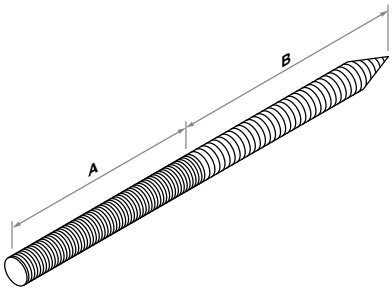

Iron /Wooden screw

- Material: S235JR EN 10025
- Electrolytic galvanizing UNI ISO 2081:2018 sp. 6 ÷ 9 [µm]

CHARACTERISTICS: screw with double thread.
USE: in combination with the collars for direct fixing to the base material with or without body of the universal nylon dowel art. 5200

CODICE	MxL	AxB[mm]		€ Each
91401	M8x80	30x50	100	0,32
91402	M8x90	30x50	100	0,53
91403	M8x200	120x80	25	1,50
91404	M10x100	40x60	100	0,88
91405	M10x120	50x60	100	0,91
91406	M10x140	60x80	50	2,46
91407	M10x180	60x120	50	1,50
91408	M10x220	75x145	25	2,15

855-Z

08COLFI

Threaded rod

- Material: S235JR EN 10025
- Electrolytic galvanizing UNI ISO 2081:2018 sp. 6 ÷ 9 [µm]

USE:to make connections,to fix clamps and join parts of structure realized with profile

CODICE	Ø	L [m]		€ Each
85501	M6	1	100	2,37
85502	M8	1	50	3,52
85503	M10	1	25	4,89
85504	M12	1	20	7,78
85505	M14(*)	1	20	12,46
85506	M16(*)	1	10	15,44
85509	1/2"(*)	1	5	101,85
85510	3/4"(*)	1	5	122,38
85511	1"(*)	1	5	194,07

(*) always check availability and delivery times

Oteraccordi S.p.A. reserves the right to change the information contained in this catalogue without notice.

920

08COLFI

Threaded socket

- Material: S235JR EN 10025
- Electrolytic galvanizing UNI ISO 2081:2018 sp. 6 ÷ 9 [µm]

USE: to make connections, to fix clamps and joint parts of structure realized with profile.

CODICE			€ Each
92001	M6x140	10/100	0,99
92002	M8x20	10/100	0,17
92003	M8x32	10/100	0,28
92004	M8x65	10/100	0,69
92005	M10x20	10/100	0,24
92006	M10x32	10/100	0,40
92007	M10x65	10/100	0,69
92008	M10x120	10/100	1,90
92009	M12x32	10/100	1,49
92010	M12x65	10/100	1,82

855-A

08COLFI

Key for threaded rod

CHARACTERISTICS: key is for threaded ø8 and ø10 bars.
USE: it allows an easy assembly and disassembly of threaded rods without affecting the thread thanks to a special roller system.

CODICE		€ Each
85500	1	140,97

Oteraccordi S.p.A. reserves the right to change the information contained in this catalogue without notice.

1020

10COLTP

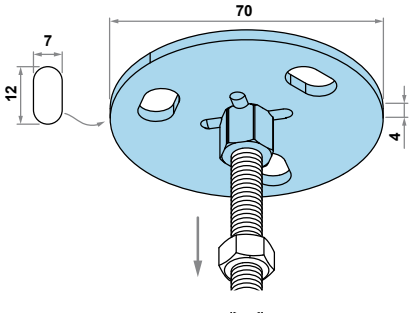

Fixing circular plate

- Material: S235JR EN 10025
- Electrolytic galvanizing UNI ISO 2081:2018 sp. 6 ÷ 9 [µm]

CHARACTERISTICS: welded projection attack.
USE: suitable for installing collars at the ceiling or at the wall using metric bars article 855Z and / or extension screw article 630Z and threaded socket art.920.

CODICE				€ Each
M20002	M8/M10	80	100	2,60
M20001	M10	100	100	2,90
M20003	M10/M12	100	100	3,22
M20004	M16	110	100	3,26
M20005	1/2"	110	100	3,97

1025

10COLTP

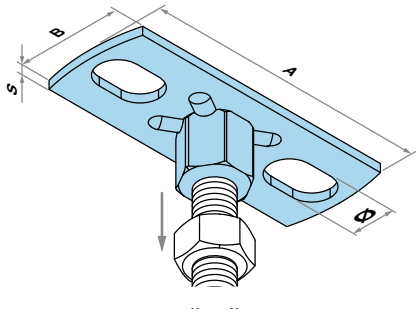

Fixing rectangular plate

- Material: S235JR EN 10025
- Electrolytic galvanizing UNI ISO 2081:2018 sp. 6 ÷ 9 [µm]

CHARACTERISTICS: welded projection welded, attack 1 " welded MIG-MAG.
USE: suitable for installing clamps at the ceiling ot at the wall using metric bars article 855Z and / or extension screw article 630Z and threaded socket art.920.

CODICE		A x B x S [mm]	holes [mm] / plate			€ Each
M25001	M8/M10	80 x 30 x 2,5	12x7,0	80	100	2,56
M25002	M10	80 x 30 x 2,5	12x7,0	80	100	2,56
M25003	M10/M12	80 x 30 x 2,5	12x7,0	100	100	3,62
M25004	M16	80 x 30 x 2,5	12x7,0	100	100	3,66
M25005	1/2"	80 x 30 x 2,5	12x7,0	100	100	3,76
M25006	1"	125 x 40 x 4,0	20x10,5	100	25	8,38

Oteraccordi S.p.A. reserves the right to change the information contained in this catalogue without notice.

1015

10COLTP

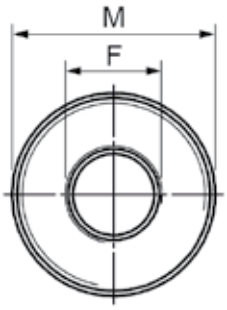

ADAPTOR

- Material: S235JR EN 10025
- Electrolytic galvanizing UNI ISO 2081:2018 sp. 6 ÷ 9 [µm]

USE: adapter to turn the collar gas attack article 1000 and 2000 in metric attack.

CODICE	MxF		€ Each
M15001	1/2"xM8	10/100	2,89
M15002	1/2"xM10	10/100	3,19

1015-01

10COLTP

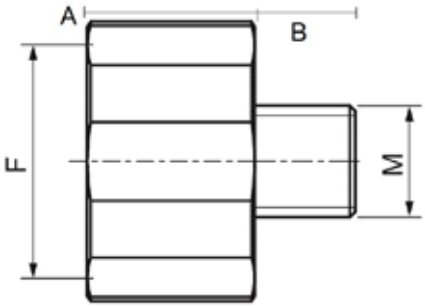

M-F REDUCER

- Material: S235JR EN 10025
- Electrolytic galvanizing UNI ISO 2081:2018 sp. 6 ÷ 9 [µm]

USE: reducer to allow the coupling of the collars with different attacks.

CODICE	A	B	MxF		€ Each
M15004	15	7	M8x1/2"	10/100	6,52
M15006	15	9	M10x1/2"	10/100	6,52
M15003	14	10	M8xM10	10/100	4,64
M15005	12	7	M10xM8	10/100	4,64

goods available while stocks last

Oteraccordi S.p.A. reserves the right to change the information contained in this catalogue without notice.

1045

10COLTP

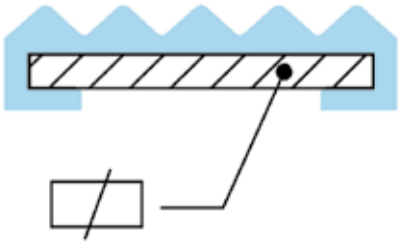

ISOPHONIC PROFILE

- Material: PVC

USE: to realize the sound proofing adaptable for all our models of collars.

CODICE	∅÷∅	[mm]	[m]		€ Each
M45001	3/8"÷2"	20x2,0÷2,5	30	1(*)	6,36
M45002	40÷160	30x2,5	30	1(*)	9,04
M45003	200÷400	40x4,0	10	1(*)	12,72

(*) Rolls/box

Oteraccordi S.p.A. reserves the right to change the information contained in this catalogue without notice.

1050

10COLTP

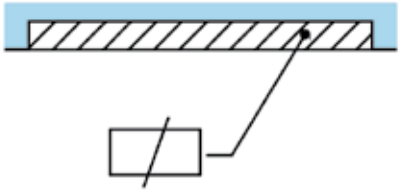

ISOPHONIC SLEEVE

• Material: PVC

USE: to realize the sound proofing adaptable for all our models of collars.

CODICE	∅÷∅	[mm]	[m]		€ Each
M50001	40÷160	30x2,5	50	1(*)	**4,48**
M50002	200÷400	40x4,0	10	1(*)	**6,59**

(*) Rolls/box

SVILUPPO LINEARE PROFILI ISOFONICI					
Ø Collare (mm)	Sviluppo lineare guaina (mm)	Sezione nastro collare (mm)	Ø Collare (mm)	Sviluppo lineare guaina (mm)	Sezione nastro collare (mm)
40	60 + 60	30x2,5	135	200 + 200	30x2,5
50	75 + 75	30x2,5	140	210 + 210	30x2,5
56	85 + 85	30x2,5	160	245 + 245	30x2,5
63	95 + 95	30x2,5	200	290 + 290	40x4,0
75	110 + 110	30x2,5	220	320 + 320	40x4,0
90	135 + 135	30x2,5	250	370 + 370	40x4,0
100	155 + 155	30x2,5	315	470 + 470	40x4,0
110	165 + 165	30x2,5	355	530 + 530	40x4,0
125	190 + 190	30x2,5	400	600 + 600	40x4,0

Oteraccordi S.p.A. reserves the right to change the information contained in this catalogue without notice.

858

08COLFI

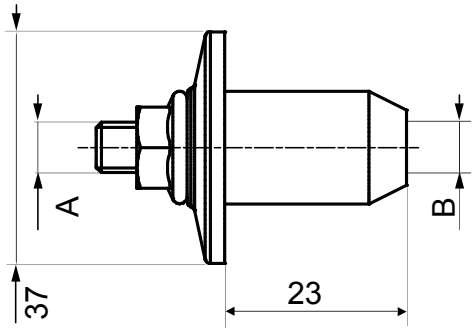

ANCHORAGE FOR WALL COAT

- Material:S235JR EN 10025

CHARACTERISTICS: supplied pre-assembled with threaded rod and entrance with female thread.
USE: fixing system for loads of spaced on walls with insulating panels to match with threaded rod art. 855-Z and dowel art. 5200.

CODICE	A	B			€ Each
85801	M6	M8	M8	10/100	9,32
85802	M8	M10	M10	10/50	9,67

859

08COLFI

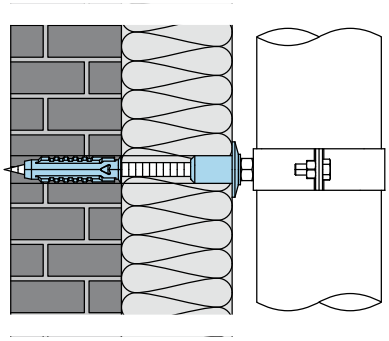

ANCHORAGE FOR WALL COAT WITH PIN AND ANCHOR

- Material: S235JR EN 10025

CHARACTERISTICS: supplied pre-assembled with threaded rod and entrance with female thread , with pin and universal nylon dowel.
USE: fixing system for loads of spaced on walls with insulating panels to match with threaded rod art. 855-Z .

CODICE	A	B				€ Each
85901	M6	M8	M8x80	10X50	5/50	9,67
85903	M6	M8	M8x200	10X50	5/50	10,80
85904	M8	M10	M10x100	12x60	5/50	11,27
85906	M8	M10	M10x140	12x60	5/50	11,64
85907	M8	M10	M10x180	12x60	5/50	12,02
85908	M8	M10	M10x220	12x60	5/50	15,18

Oteraccordi S.p.A. reserves the right to change the information contained in this catalogue without notice.

TABLE WEIGHT PIPING

Drain pipes in PE (GEBERIT)

According to DIN 19535

DN *NW*	Ø internal *mm*	Ø external *mm*	wall thickness *mm*	empty *Kg/m*	with water *Kg/m*		spacing *m*
30	26	32,0	3,0	0,27	0,80		0,5
40	34	40,0	3,0	0,34	1,25		0,5
40	42	48,0	3,0	0,40	1,86		0,6
50	44	50,0	3,0	0,44	2,36		0,8
56	50	56,0	3,0	0,50	2,48		0,8
60	57	63,0	3,0	0,56	3,11		0,8
70	69	75,0	3,0	0,67	4,41		0,8
90	83	90,0	3,5	0,95	6,36		0,9
100	101,4	110,0	4,3	1,43	9,50		1,1
125	115,2	125,0	4,9	1,61	12,27		1,3
140	130,2	140,0	4,9	2,28	15,39		1,4
150	147,6	160,0	6,2	3,00	20,10		1,6
200	187,6	200,0	6,2	3,63	31,45		2,0
250	234,4	250,0	7,8	6,01	49,15		2,0
300	295,4	315,0	9,8	9,40	77,93		2,0
400	400	400	12,4	15,88	125,60		4,0

Drain pipes PVC - rigid, class 3

According to DIN 19532 and DIN 8062

DN *NW*		Ø external *mm*	wall thickness *mm*	empty *Kg/m*	with water *Kg/m*		spacing 20° *m*	spacing 40° *m*
40		50,0	1,8	0,42	2,09		0,80	0,60
50		63,0	1,9	0,56	3,29		1,10	0,70
65		75,0	2,2	0,78	4,65		1,30	0,80
80		90,0	2,7	1,13	6,70		1,30	0,80
100		110,0	3,2	1,64	10,07		1,60	1,00
125		140,0	3,7	2,13	12,92		1,80	1,10
150		160,0	4,7	3,44	21,16		2,20	1,20

Galvanized threaded pipes

According to DIN 2440 and DIN EN 10255

DN *NW*	Pipe size *inch*	Ø external *mm*	wall thickness *mm*	empty *Kg/m*	with water *Kg/m*	with water and insulation *Kg/m*	spacing *m*
8	1/4"	13,5	2,35	0,65	0,70	1,2	2,00
10	3/8"	17,2	2,35	0,89	1,01	1,3	2,25
15	1/2"	21,3	2,65	1,27	1,47	1,8	2,75
20	3/4"	26,9	2,65	1,65	2,02	2,4	3,00
25	1"	33,7	3,25	2,55	3,13	3,9	3,50
32	1 1/4"	42,4	3,25	3,28	4,30	5,7	3,75
40	1 1/2"	48,3	3,25	3,77	5,15	6,6	4,25
50	2"	60,3	3,65	5,33	7,55	9,9	4,75
65	2 1/2"	76,1	3,65	6,80	10,52	15,0	5,50
80	3"	88,9	4,05	8,85	13,98	19,9	6,00
100	4"	114,3	4,50	12,60	21,30	30,9	6,00
125	5"	139,7	4,85	16,90	30,17	40,6	6,00
150	6"	165,1	4,85	20,10	39,06	50,4	6,00

GAS steel pipes

According to DIN 2448 (DIN EN 10220)

DN NW	Ø internal *mm*	Ø external *mm*	wall thickness *mm*	empty *Kg/m*	with water *Kg/m*	with water and insulation *Kg/m*	spacing *m*
8	1/4"	13,5	1,80	0,52	0,6	1	1,75
8		14		0.63	0,75	1,1	1,75
10	3/8"	17,2	1,80	0,68	0,83	1,5	2,25
15	1/2"	20,0	2,00	0,89	1,10	1,6	2,25
15		21,3		0,96	1,20	1,8	2,75
20	3/4"	25,0	2,30	1,13	1,50	2,1	3,00
20		26,9		1,40	1,79	2,4	3,00

GAS steel pipes							
According to DIN 2448							
DN *NW*	Ø internal *mm*	Ø external *mm*	wall thickness *mm*	empty *Kg/m*	with water *Kg/m*	with water and insulation *Kg/m*	spacing *m*
25	1″	30,0	2,60	1,76	2,25	2,7	3,00
25		31,8	2,60	1,87	2,50	3,2	3,25
32	1 1/2″	33,7	2,60	2,01	2,65	4,3	3,50
32		38,0	2,60	2,30	3,11	4,8	3,65
32		42,4	2,60	2,60	3,64	5,2	3,70
40	1 1/4″	44,5	2,60	2,70	3,91	5,5	3,75
40		48,3	2,60	2,93	4,39	6,0	4,25
50	2″	51,0	2,60	3,12	4,77	6,5	4,40
50		57,0	2,90	3,90	5,96	7,6	4,60
50		60,3	2,90	4,14	6,47	9,0	4,75
65	2 1/2″	63,5	2,90	4,36	6,97	9,5	4,75
65		70,0	2,90	4,80	8,10	9,9	5,00
65		76,1	2,90	5,28	9,16	13,9	5,50
80	3″	82,5	3,20	6,31	10,86	15,2	5,75
80		88,9	3,20	6,81	12,15	18,4	6,00
80		101,6	3,60	8,76	15,76	24,8	6,00
100	4″	108,0	3,60	9,33	17,31	27,5	6,00
100		114,3	3,60	9,90	18,90	28,8	6,00
100		127,0	4,00	12,20	23,32	35,1	6,00
125	5″	133,0	4,00	12,80	25,07	36,5	6,00
125		139,7	4,00	13,50	27,12	38,2	6,00
125		152,4	4,50	16,40	32,54	46,5	6,00
150	6″	159,0	4,50	17,10	34,76	48,9	6,00
150		168,3	4,50	18,10	36,93	50,6	6,00
150		177,8	5,00	21,30	43,40	58,9	6,00
200	8″	193,7	5,40	25,00	51,26	66,5	6,00
200		219,1	5,90	31,00	64,73	79,5	6,00
200		244,5	6,30	37,01	42,30	79,3	6,00
200		267,0	6,30	40,60	91,40	108,5	6,00
250	10"	273,0	6,30	41,60	95,40	111,7	6,00
-		298,5	7,10	51,10	117,60	137,5	6,00
-		318,0	7,10	57,40	129,50	150,0	6,00
300	12"	323,9	7,10	55,60	130,85	150,0	6,00
400	16"	406,4	8,80	85,90	204,40	227,7	6,00
500	20"	508,0	11,00	135,00	320,50	345,5	6,00

Stainless steel pipes and stainless steel pipes crimped							
According to EN ISO 1127							
DN *NW*	Ø internal *mm*	Ø external *mm*		empty *Kg/m*	with water *Kg/m*	with water and insulation *Kg/m*	spacing *m*
10	3/8"	17,2		0,63	0,78	1,45	1,3
15	1/2"	21,3		0,97	1,21	2,50	1,5
20	3/4"	28,9		1,25	1,68	3,10	2,0
25	1"	33,7		1,58	2,27	4,00	2,3
32	1 1/4"	42,4		2,02	3,18	4,80	2,8
40	1 1/2"	48,3		2,31	3,85	5,45	3,0
50	2"	60,3		2,92	5,41	7,95	3,5
65	2 1/2"	76,1		3,70	7,78	12,50	4,3
80	3"	88,9		4,35	10,01	16,25	4,8
100	4"	114,3		7,27	18,62	26,50	5,0
125	5"	139,7		8,82	23,13	34,00	5,0
150	6"	168,3		13,20	34,09	47,75	5,0
200	8"	219,1		17,30	52,83	67,50	5,0
250	10"	273,0		21,60	80,14	98,50	5,0
300	12"	323,9		25,70	108,10	127,25	5,0
400	16"	406,4		32,30	162,02	185,50	5,0
500	20"	508,0		40,40	243,08	268,00	5,0

Copper pipes							
According to DIN 1057 (DIN 1786)							
DN NW		Ø external *mm*	wall thickness *mm*	empty *Kg/m*	with water *Kg/m*	with water and insulation *Kg/m*	spacing *m*
8		10,0	1,0	0,25	0,30	0,40	1,00
10		12,0	1,0	0,30	0,39	0,50	1,25
12		15,0	1,0	0,39	0,53	0,80	1,25
15		18,0	1,0	0,48	0,68	1,00	1,50
20		22,0	1,0	0,59	0,91	1,30	2,00
25		28,0	1,5	1,11	1,60	2,40	2,25
32		35,0	1,5	1,41	2,21	3,10	2,75
40		42,0	1,5	1,70	2,89	4,40	3,00
50		54,0	2,0	2,91	4,87	7,30	3,50
		64,0	2,0	3,47	6,29	9,80	4,00
65		76,1	2,0	4,10	8,20	14,00	4,25
80		88,9	2,0	4,90	10,50	16,40	4,75
100		108,0	2,0	7,40	15,70	27,50	5,00
125		133,0	3,0	10,90	31,50	35,80	5,00
150		159,0	3,0	13,10	31,50	43,50	5,00
200		219,0	3,0	18,24	53,87	66,00	5,00
		267,0	3,0	22,29	75,80	91,50	5,00
Multilayer pipes							
According to EN 10954-01							
DN NW		Ø external *mm*	wall thickness *mm*	empty *Kg/m*	with water *Kg/m*	with water and insulation *Kg/m*	spacing *m*
10		14	2,00	0,10	0,20	0,4	1,0
12		16	2,00	0,10	0,20	0,5	1,0
14		18	2,00	0,15	0,30	0,6	1,0
16		20	2,00	0,20	0,40	0,7	1,0
20		26	3,00	0,30	0,60	0,9	1,5
26		32	3,00	0,40	0,90	1,2	2,0
32		40	4,00	0,60	1,50	2,1	2,0
41		50	4,50	0,90	2,30	3,2	2,5
51		63	6,00	1,30	3,60	5,2	2,5
Exhaust pipes of cast iron (SML, ML)							
According to DIN EN 877 (DIN 19522)							
DN NW		Ø external *mm*	wall thickness *mm*	empty *Kg/m*	with water *Kg/m*		
40		48,0	3,0	3,07	4,46		
50		58,0	3,5	4,34	6,39		
70		78,0	3,5	5,94	9,90		
100		110,0	3,5	8,49	16,82		
125		135,0	4,0	11,93	24,60		
150		160,0	4,0	14,21	32,36		
200		210,0	5,0	23,35	54,76		
250		274,0	5,5	33,64	87,96		
300		326,0	6,0	43,73	121,17		
400		429,0	8,1	77,65	211,49		
500		532,0	9,0	107,21	314,71		
600		635,0	9,9	140,95	438,20		
Exhaust steel pipes							
According to DIN 19500							
DN NW		Ø external *mm*	wall thickness *mm*	empty *Kg/m*	with water *Kg/m*		
50		60,0	3,50	5,30	7,50		
70		80,0	3,50	7,10	11,28		
100		112,0	4,00	10,30	18,78		
125		137,0	4,00	13,70	26,78		
150		162,0	5,00	17,30	35,43		
200		212,0	6,00	32,70	64,10		

08COLFI

DATA SHEET PRODUCT

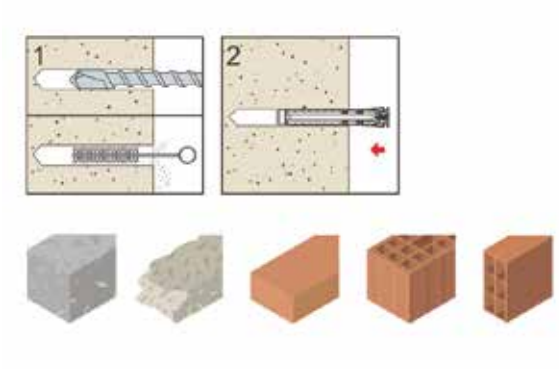

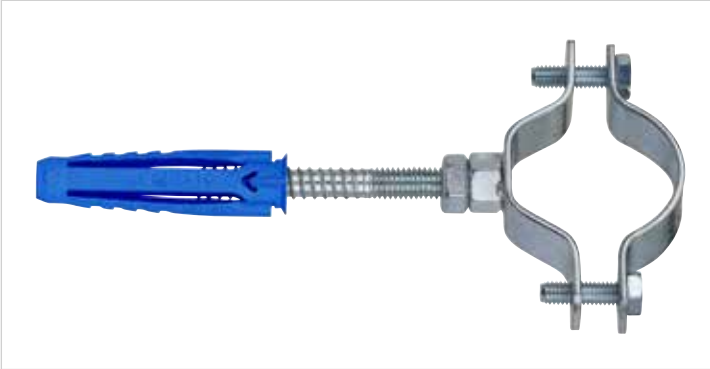

HEAVY CLAMPS FOR PIPES
WITH PIN AND DOWEL

DESCRIPTION:
heavy clamps mainly for steel pipes ,but also for other pipes used in distribution systems such as white water, water black, gas, heating etc.

FEATURES AND ADVANTAGES:
- the nut on the clamp is electro-welded by projection and gives high torsional resistance
- the lower part of the clamp has a trapezoidal shape to ensure a better adaptability to the pipe circumference and to the nut welding
- rounded edges eliminate the risk of hand cuts during installation
- packed in a single plastic bag to avoid loss of components on-site

RAW MATERIAL: steel DD11 EN10111

GALVANIZATION: electrolytic UNI ISO 2081:2018 th 6÷9µ

CODE	PIPE DIAMETER		CLAMP ATTACK	CLAMP DIMEN-SION		SCREW	DOWEL	TIP	TENSILE LOAD CAPACITY	PZ	PZ
	Inch Ø	mm Ø	mm Ø	mm Wid	mm Thick	mm ØxL	mm ØxL	mm foro	Kg	for pack	for bag
83003	3/8"	16÷20	M8	20	2,5	8x80	10x50	10	350	100	1
83004	1/2"	20÷24							350	100	1
83005	3/4"	25÷30							350	100	1
83006	1"	32÷36							350	100	1
83007	1.1/4"	38÷44							350	50	1
83008	1.1/2"	46÷50							350	50	1
83009	2"	58÷62							350	50	1
83010	2.1/2"	74÷80	M10	30		10x100	12x60	12	350	25	1
83011	3"	84÷89							350	25	1
83013	4"	112÷118							350	25	1
83014	5"	134÷138							400	25	1
83015	6"	164÷172							400	25	1

RELATED ITEMS:

threaded bar
Art.855-Z - pag. 45

pin
Art.914 - pag. 45

key for threaded bar
Art.855-A - pag. 46

note

STAINLESS STEEL AISI (A2)

CLAMPS FOR PIPES

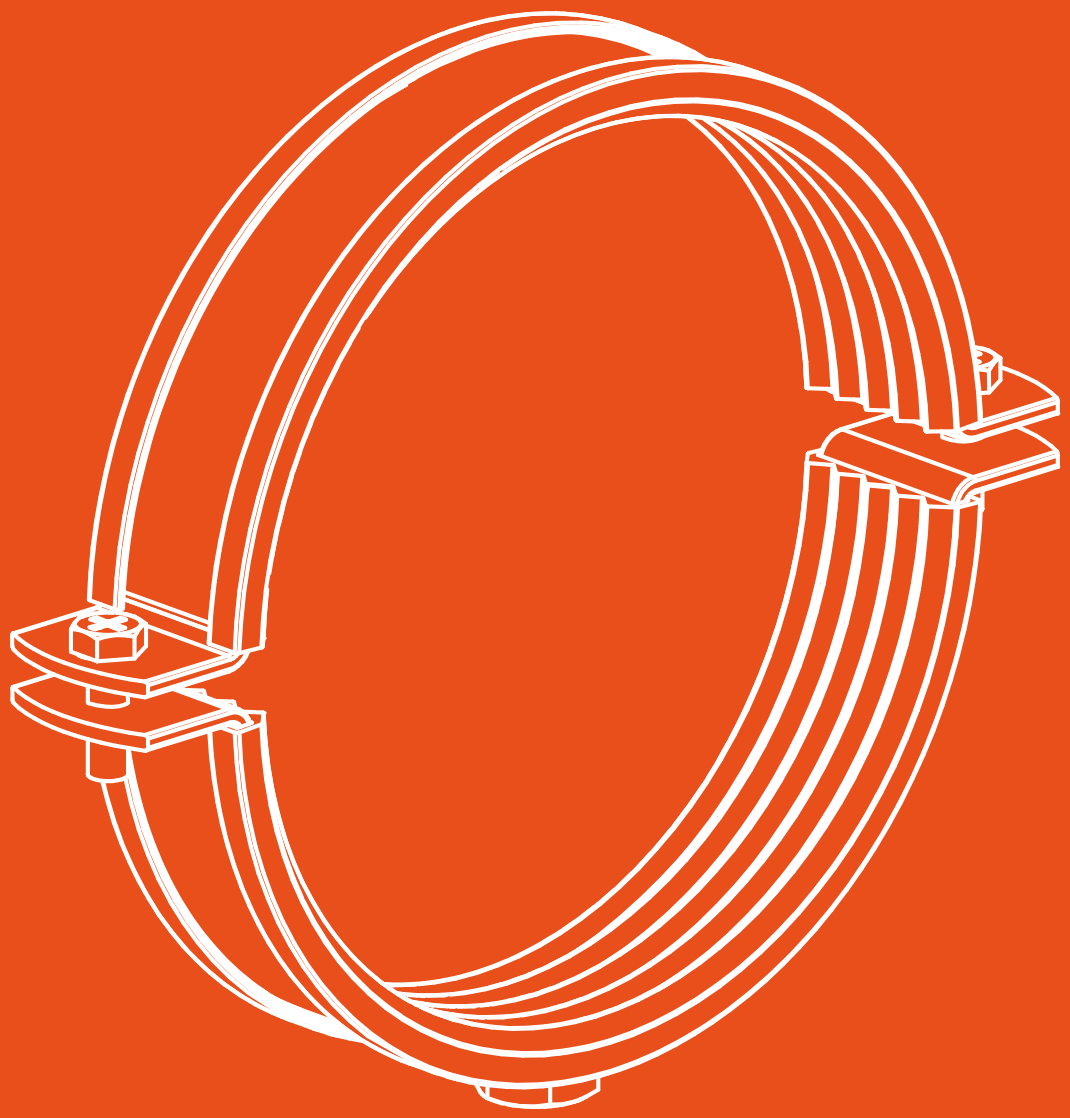

OTER FIX

812-I

08COLF4

Stainless steel light clamp with pin and anchor

- Material: Stainless steel collar and pin AISI 304 EN 10088
- Nylon plug

USE: lightweight collar is suitable for fixing copper pipes and press pipes The two parts which make up the collar are supplied assembled.

CODICE	Ø	[mm]					€ Each
81212	12	SS:10x0,9 - SI:13x1,2	M6	M6x45	6x30	10/100	**4,01**
81215	15	SS:10x0,9 - SI:13x1,2	M6	M6x45	6x30	10/100	**4,08**
81218	18-3/8"	SS:10x0,9 - SI:13x1,2	M6	M6x45	6x30	10/100	**4,23**
81222	22-1/2"	SS:10x0,9 - SI:13x1,2	M6	M6x45	6x30	10/100	**4,37**
81228	28-3/4"	SS:10x0,9 - SI:13x1,2	M6	M6x45	6x30	10/100	**4,67**

SS = UPPER BRACKET **SI = LOWER BRACKET**

812-I-01

08COLF4

Pin for stainless steel light clamp

- Material: Stainless steel AISI 304 EN 10088

CHARACTERISTICS:from one end of the pin presents a metric thread for the screwing of a lightweight collar and the other end has a chipboard thread to be screwed in the body of the dowel.

CODICE				€ Each
81276	M6x76	8x40	10/100	**1,21**
81290	M6x90	8x40	10/100	**1,30**

Oteraccordi S.p.A. reserves the right to change the information contained in this catalogue without notice.

826-I

08COLF4

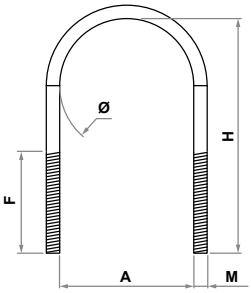

U BOLT WITH NUTS AND WASHER

• Material: Stainless steel AISI 304 EN 10088

CHARACTERISTICS: in the package n.2 hexagonal nuts UNI 5588 DIN 934 stainless steel AISI 304(A2)and No. 2 flat washers UNI 6592 STAINLESS STEEL AISI 304 (A2) are included.
USE: the collar is fixed to the channel with two nuts and two washers provided. Suitable for fixing pipes on profiles 30x15 and 32x20

CODICE	Ø	M x F H	x A [mm]		€ Each
82603	3/8"	M6 x 16	36 x 18	50	**4,53**
82604	1/2"	M6 x 18	40 x 22	50	**4,67**
82605	3/4"	M6 x 18	45 x 27	50	**4,81**
82606	1"	M6 x 18	52 x 34	50	**5,09**
82607	1.1/4"	M6 x 18	61 x 43	25	**5,39**
82608	1.1/2"	M8 x 28	70 x 49	25	**8,16**
82609	2"	M8 x 28	82 x 61	25	**11,15**
82610	2.1/2"	M8 x 28	98 x 77	25	**12,97**
82611	3"	M8 x 28	110 x 89	25	**14,06**
82612	3.1/2"	M8 x 35	127 x 102	10	**21,86**
82613	4"	M8 x 35	139 x 115	10	**19,59**
82614	5"	M8 x 35	165 x 140	10	**25,48**
82615	6"	M10 x 45	196 x 168	10	**32,93**

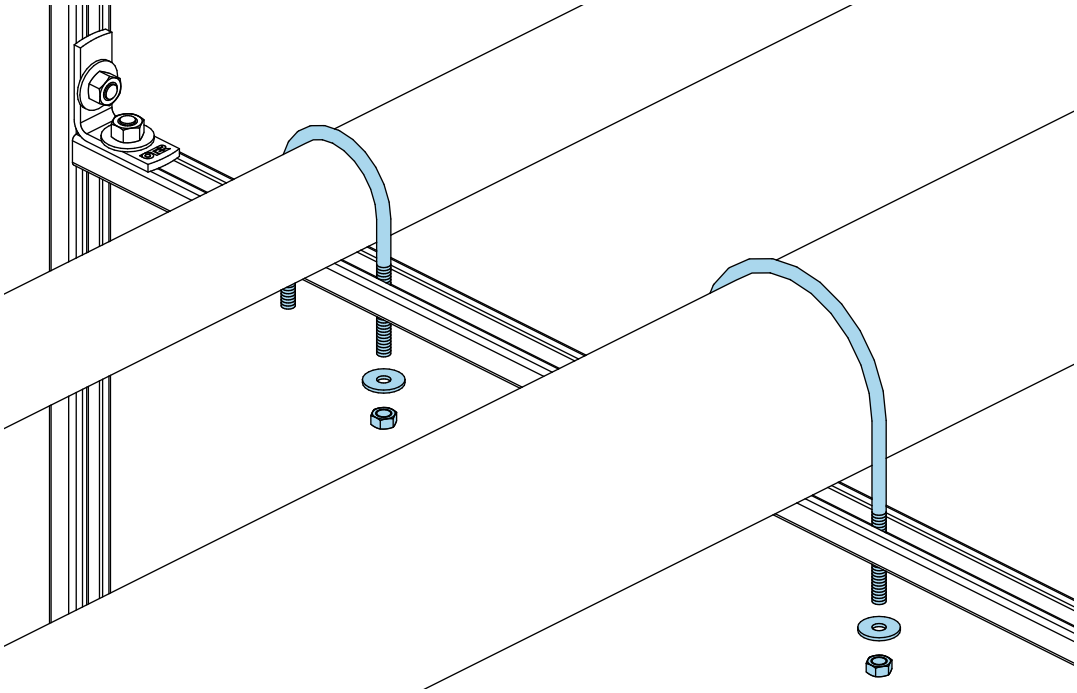

Oteraccordi S.p.A. reserves the right to change the information contained in this catalogue without notice.

832-I

08COLF4

STAINLESS STEEL CLAMP WITH PIN AND ANCHOR

- Material: Stainless steel collar and pin AISI 304 EN 10088

CHARACTERISTICS: electrowelded projection collar attack supplied with nylon plug and packaged in a single plastic bag.
USE: for fixing pipes to the wall and to the ceiling

CODICE	Ø	∅÷∅	[mm]						€ Each
83203	3/8"	16÷20	20x2,0	M8	M8x80	10x50	300	100	**5,34**
83204	1/2"	20÷24	20x2,0	M8	M8x80	10x50	300	100	**5,63**
83205	3/4"	25÷30	20x2,0	M8	M8x80	10x50	300	100	**5,76**
83206	1"	32÷36	20x2,0	M8	M8x80	10x50	300	100	**5,91**
83207	1.1/4"	38÷44	20x2,0	M8	M8x80	10x50	300	50	**6,19**
83208	1.1/2"	46÷50	20x2,0	M8	M8x80	10x50	300	50	**6,48**
83209	2"	58÷62	20x2,0	M8	M8x80	10x50	300	50	**7,07**
83210	2.1/2"	74÷80	30x2,5	M10	M10x100	12x60	300	25	**14,06**
83211	3"	84÷89	30x2,5	M10	M10x100	12x60	300	25	**14,80**
83213	4"	112÷118	30x2,5	M10	M10x100	12x60	300	25	**17,49**
83214	5"	134÷138	30x2,5	M10	M10x100	12x60	400	25	**20,54**
83215	6"	164÷172	30x2,5	M10	M10x100	12x60	400	25	**22,87**

Oteraccordi S.p.A. reserves the right to change the information contained in this catalogue without notice.

837-I

08COLF4

STAINLESS STEEL PIPE CLAMP

- Material: Stainless steel AISI 304 EN 10088

CHARACTERISTICS: electrowelded projection collar attack supplied with nylon plug and packaged in a single plastic bag.
USE: for fixing pipes to the wall and to the ceiling

CODICE	Ø	∅÷∅	[mm]				€ Each
83703	3/8"	16÷20	20x2,0	M8	300	100	**3,93**
83704	1/2"	20÷24	20x2,0	M8	300	100	**4,08**
83705	3/4"	25÷30	20x2,0	M8	300	100	**4,15**
83706	1"	32÷36	20x2,0	M8	300	100	**4,60**
83707	1.1/4"	38÷44	20x2,0	M8	300	50	**4,95**
83708	1.1/2"	46÷50	20x2,0	M8	300	50	**5,31**
83709	2"	58÷62	20x2,0	M8	300	50	**5,66**
83710	2.1/2"	74÷80	30x2,5	M10	300	25	**11,11**
83711	3"	84÷89	30x2,5	M10	300	25	**11,82**
83713	4"	112÷118	30x2,5	M10	300	25	**14,00**
83714	5"	134÷138	30x2,5	M10	400	25	**18,96**
83715	6"	164÷172	30x2,5	M10	400	25	**20,37**
83716	8"(*)	219÷225	40x4,0	M12	500	10	**48,81**
83717	10"(*)	273÷279	40x4,0	M12	600	10	**0,00**

(*) always check availability and delivery times

Oteraccordi S.p.A. reserves the right to change the information contained in this catalogue without notice.

832-IG

08COLF4

ISOPHONIC STAINLESS STEEL CLAMP WITH PIN AND ANCHOR

- Material: Stainless steel collar and pin AISI 304 EN 10088
- EPDM gasket

CHARACTERISTICS: electrowelded projection collar attack supplied with nylon plug and packaged in a single plastic bag.
USE: suitable for insulating pipes

CODICE	Ø	[mm]						€ Each
83220	3/8"	20x2,0	M8	M8x80	10x50	300	50	**6,63**
83221	1/2"	20x2,0	M8	M8x80	10x50	300	50	**7,16**
83222	3/4"	20x2,0	M8	M8x80	10x50	300	50	**7,21**
83223	1"	20x2,0	M8	M8x80	10x50	300	50	**7,72**
83224	1.1/4"	20x2,0	M8	M8x80	10x50	300	25	**8,45**
83225	1.1/2"	20x2,0	M8	M8x80	10x50	300	25	**9,19**
83226	2"	20x2,0	M8	M8x80	10x50	300	25	**9,76**
83227	2.1/2"	30x2,5	M10	M10x100	12x60	300	10	**19,96**
83228	3"	30x2,5	M10	M10x100	12x60	300	10	**21,28**
83229	4"	30x2,5	M10	M10x100	12x60	300	10	**25,78**
83230	5"	30x2,5	M10	M10x100	12x60	400	10	**26,81**
83231	6"	30x2,5	M10	M10x100	12x60	400	10	**28,85**

Oteraccordi S.p.A. reserves the right to change the information contained in this catalogue without notice.

837-IG

08COLF4

ISOPHONIC STAINLESS STEEL PIPE CLAMP

- Material: Stainless steel collar 304 EN 10088
- EPDM gasket

CHARACTERISTICS: electrowelded projection collar attack supplied with nylon plug and packaged in a single plastic bag.
USE: it ensures the continuity of the insulation of a pipe and reduces the sound level transmitted from the pipe to the support

CODICE	Ø	[mm]				€ Each
83720	3/8"	20x2,0	M8	300	50	**5,53**
83721	1/2"	20x2,0	M8	300	50	**5,76**
83722	3/4"	20x2,0	M8	300	50	**6,19**
83723	1"	20x2,0	M8	300	50	**6,77**
83724	1.1/4"	20x2,0	M8	300	25	**7,35**
83725	1.1/2"	20x2,0	M8	300	25	**8,16**
83726	2"	20x2,0	M8	300	25	**8,89**
83727	2.1/2"	30x2,5	M10	300	10	**18,51**
83728	3"	30x2,5	M10	300	10	**19,66**
83729	4"	30x2,5	M10	300	10	**24,33**
83730	5"	30x2,5	M10	400	10	**25,21**
83731	6"	30x2,5	M10	400	10	**26,68**
83732	8"(*)	40x4,0	M12	500	10	**69,64**
83733	10"(*)	40x4,0	M12	600	10	**84,36**

(*) always check availability and delivery times

Oteraccordi S.p.A. reserves the right to change the information contained in this catalogue without notice.

881-I

08COLF4

Clamp for smoke pipes with pin and anchor

- Material: Stainless steel collar and pin AISI 304 EN 10088

CHARACTERISTICS: it's supplied with nylon plug and packaged in a single bag
USE: for fixing smoke pipes

CODICE	Ø	[mm]						€ Each
88101	60	25x1,5	M8	M8x200	10x50	150	25	**14,13**
88102	80	25x1,5	M8	M8x200	10x50	150	25	**14,43**
88103	100	25x1,5	M8	M8x200	10x50	150	25	**15,60**
88104	110	25x1,5	M8	M8x200	10x50	150	25	**17,49**
88105	120	25x1,5	M8	M8x200	10x50	150	25	**18,22**
88106	125	25x1,5	M8	M8x200	10x50	150	25	**19,96**
88107	130	25x1,5	M8	M8x200	10x50	150	25	**21,41**
88108	140	25x1,5	M8	M8x200	10x50	150	25	**25,21**
88109	150	25x1,5	M8	M8x200	10x50	150	25	**28,12**
88110	160	25x1,5	M8	M8x200	10x50	150	25	**30,15**
88111	180	25x1,5	M8	M8x200	10x50	150	10	**53,03**
88112	200	25x1,5	M8	M8x200	10x50	150	10	**60,48**
88113	220	25x1,5	M8	M8x200	10x50	150	10	**69,21**
88114	250	25x1,5	M8	M8x200	10x50	150	10	**78,24**
88115	300	25x1,5	M8	M8x200	10x50	150	10	**95,87**

855-I

08COLF4

Stainless steel threaded bar

- Material: Stainless steel AISI 304 EN 10088

CHARACTERISTICS: The rod has a metric thread.
USE: to create connections between sections of fixing system (light / heavy).

CODICE	Ø	L [m]	[pz]	€ Each
85512	M8	1	10	**17,04**
85513	M10	1	10	**27,98**

Oteraccordi S.p.A. reserves the right to change the information contained in this catalogue without notice.

857-I

08COLF4

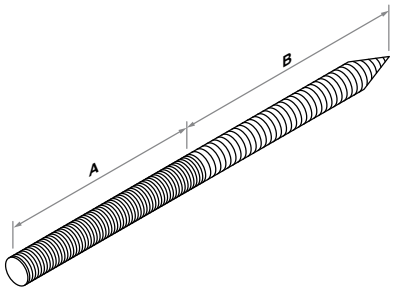

Kit for stainless steel clamp

• Material: Stainless steel collar and pin AISI 304 EN 10088

CHARACTERISTICS: the anchor kits for the collars is formed by a pin with double thread (metric and chipboard), a nut and a dowel. Packaged in single bag.
USE: for fixing clamps to the wall or ceiling

CODICE		MxL	AxB[mm]		€ Each
85711	10x50	M8x80	30x50	100	**3,07**
85713	10x50	M8x200	120x80	50	**6,40**
85714	12x60	M10x100	40x60	50	**6,12**

1025-I

08COLF4

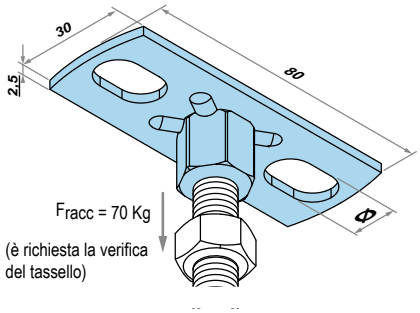

Fixing plate

• Material:Stainless steel AISI 304 EN 10088

CHARACTERISTICS: The metric attack is electrowelded.
USE: for fixing clamps at the wall and at ceiling. The plate is provided with two holes and a threaded M10 central attack for the screwing of a threaded metric bar .

CODICE		holes [mm] / plate		€ Each
M2513	M10	12x7,0	100	**6,12**

Oteraccordi S.p.A. reserves the right to change the information contained in this catalogue without notice.

note

note

LIGHT BRACKETING

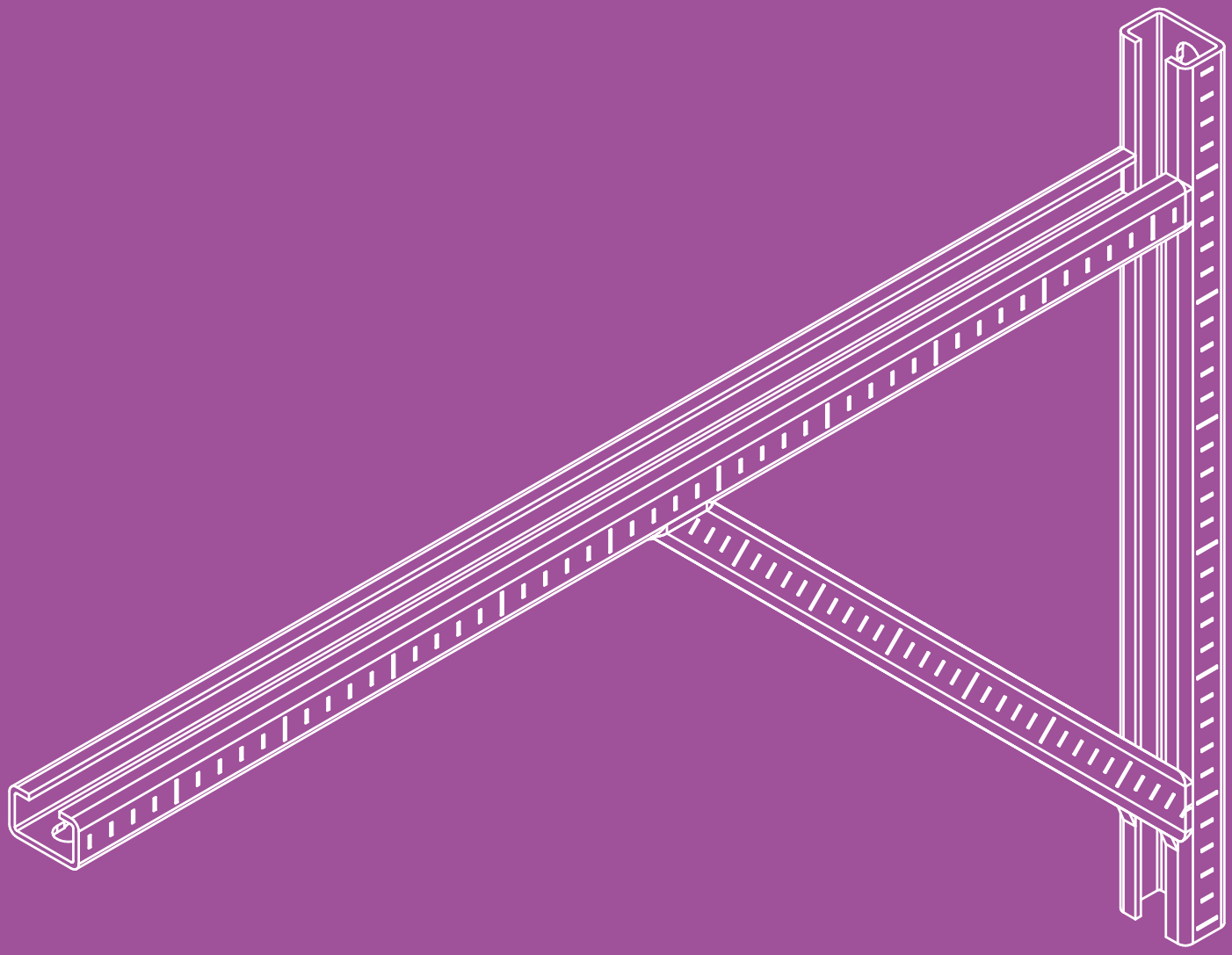

OTER FIX

110-01

09SISFI

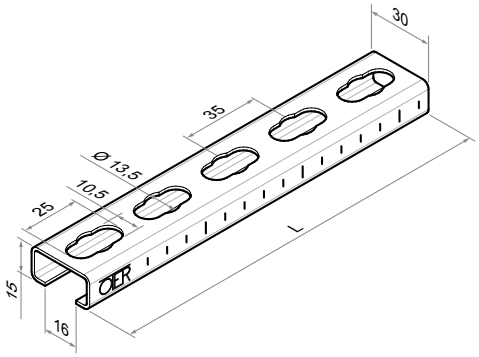

PROFILE: 30x15

• Material: DX51 - Z140 EN 10142 • galvanizing Sendzimir

CHARACTERISTICS:the 30x15 profile belongs to the light fixture range. It's 1,5 mm thickness and the rods are 2,00 mm long.It can be used with all accessories and conponents of light fixture.On one side there are graduated marks which help the cutting to measure on site.On the other side there are big holes which allow installation adjustment.

USE: The 30x15 profile is used for creation of support structures for civil plants (support cabling, electrical systems, ducting and ventilation) and for small and middle entity plants. The reduced section of the bar makes it particularly suitable in all those situations in which the space is narrow.

CODICE	mm	L [m]	[pz]	€ Each
11000	1,5	2	50	**18,65**
11015	1,5	2	10	**19,01**

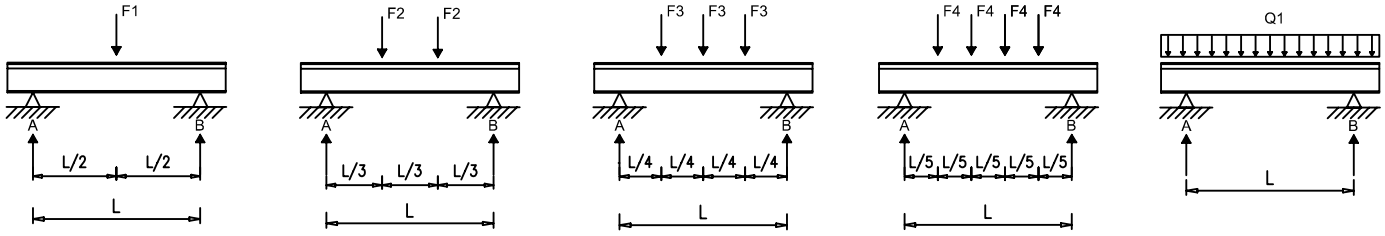

	L = 500 [mm]	L = 1000 [mm]	L = 1500 [mm]	L = 2000 [mm]
F1 [kg]	43,2	17,3	7,7	4,3
F2 [kg]	32,4	10,9	4,9	2,7
F3 [kg]	21,6	8,1	3,6	2,0
F4 [kg]	18,0	6,5	2,9	1,6
Q1 [kg/m]	86,4	27,6	8,2	3,5

Condizioni di carico:

- Sollecitazione nel materiale inferiore all'85% dello snervamento;
- Oppure freccia massima di 1/200 (intesa come deformazione locale diviso lunghezza).

Oteraccordi S.p.A. reserves the right to change the information contained in this catalogue without notice.

110-02

09SISFI

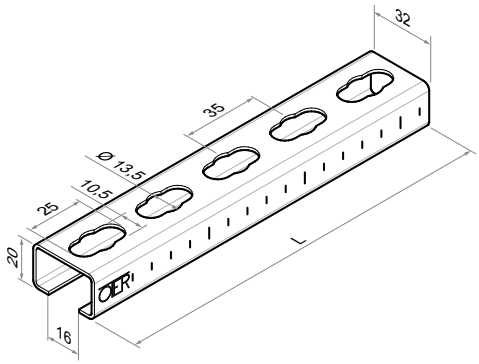

PROFILE: 32x20

- Material: DX51 - Z140 EN 10142
- galvanizing Sendzimir

CHARACTERISTICS:the 32x20 profile belongs to the light fixture range. It's 2,5 mm thickness and the rods are 2,0 mm long.It can be used with all accessories and conponents of light fixture.On one side there are graduated marks which help the cutting to measure on site.On the other side there are big holes which allow installation adjustment.
USE: The 32x20 profile is used for creation of support structures for civil plants (support cabling, electrical systems, ducting and ventilation) and for small and middle entity plants. The reduced section of the bar makes it particularly suitable in all those situations in which the space is narrow.

CODICE	mm	L [m]	[pz]	€ Each
11020	2,5	2	50	30,69
11030	2,5	2	10	31,23

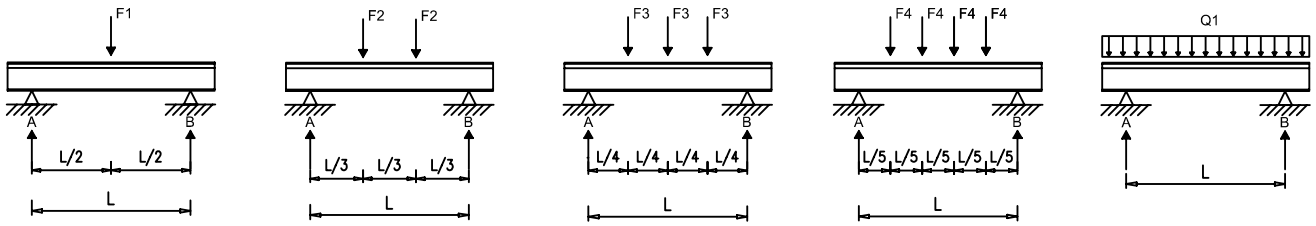

	L = 500 [mm]	L = 1000 [mm]	L = 1500 [mm]	L = 2000 [mm]
F1 [kg]	97,8	48,9	32,6	19,9
F2 [kg]	73,4	36,7	22,4	12,6
F3 [kg]	48,9	36,7	16,6	9,4
F4 [kg]	40,8	20,4	13,3	7,5
Q1 [kg/m]	195,7	97,8	37,7	15,9

Condizioni di carico:
- Sollecitazione nel materiale inferiore all’85% dello snervamento;
- Oppure freccia massima di 1/200 (intesa come deformazione locale diviso lunghezza).

Oteraccordi S.p.A. reserves the right to change the information contained in this catalogue without notice.

110-03

09SISFI

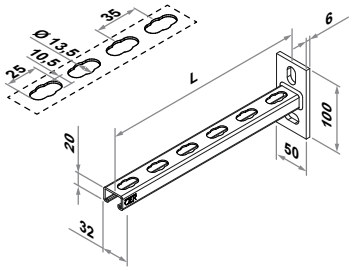

WALL BRACKET 32x20

- Material: DX51 - Z140 EN 10142
- electrolytic galvanizing UNI ISO 2081:2018 sp. 6 ÷ 9 [µm]

CHARACTERISTICS: Support bracket with section C. The fixing plate has slotted holes to allow greater flexibility for the attachment to the wall base material , ceiling and floor, through the use of anchors. On one of the two sides it is present a graduated scale for easier cutting to size at the construction site.The welding along the perimeter of the profile 32x20 to the plate ensures an excellent resistance to the work loads.The wall bracket has a closure plug.
USE: The bracket allows you to create the perfect support for air conditioning systems, canalization and electrical.

CODICE	L [mm]	holes [mm] / plate		€ Each
11040	210	10x16	5	**15,58**
11050	315	10x16	5	**17,13**
11051	450	10x16	5	**21,09**
11052	600	10x16	5	**22,71**

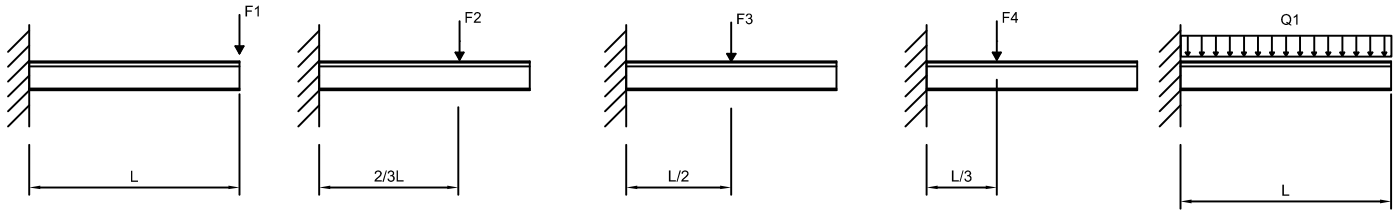

	L = 200 [mm]	L = 300 [mm]
F1 [kg]	55,5	37,0
F2 [kg]	83,3	55,5
F3 [kg]	111,0	74,0
F4 [kg]	166,5	111,0
Q1 [kg/m]	277,5	123,3

Condizioni di carico:

- Sollecitazione nel materiale inferiore all'85% dello snervamento;
- Oppure freccia massima di 1/200 (intesa come deformazione locale diviso lunghezza);
- La verifica del carico ammissibile è subordinata alla capacità di portata degli ancoranti (a cura dell'applicatore).

Oteraccordi S.p.A. reserves the right to change the information contained in this catalogue without notice.

110-04

09SISFI

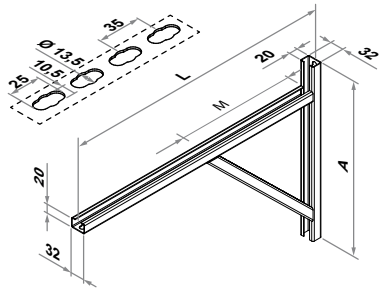

Welded wall bracket 32x20

- Material: S235JR EN 10025
- electrolytic galvanizing UNI ISO 2081:2018 sp. 6 ÷ 9 [µm]

CHARACTERISTICS: bracket with a C-section and with welded angle support. On one of the two sides there is a graduated scale for easier cutting to size at the construction site. The welding of three pieces of 32x20 profile (light clamping system) ensures an excellent resistance to high workloads .The bracket has a closure plug.
USE: the bracket allows you to create the perfect support for hydro-sanitary, electrical, pipeline and air conditioning systems.

CODICE	A [mm]	L [mm]	M [mm]	C		€ Each
11060	300	370	185	1	2	**28,19**
11070	350	545	265	1	2	**35,80**

See art. 110-06 for installation Kit

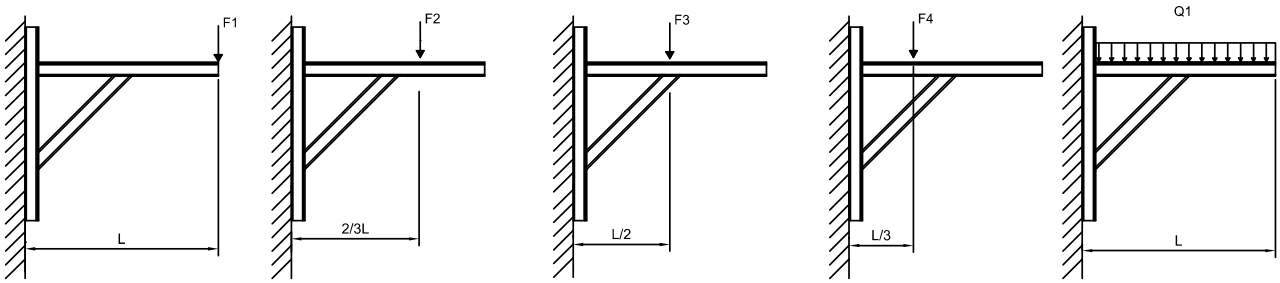

	L = 370 [mm]	L = 545 [mm]
F1 [kg]	82,7	48,3
F2 [kg]	165,4	96,6
F3 [kg]	110,3	64,4
F4 [kg]	124,0	72,5
Q1 [kg/m]	447,0	169,5

Condizioni di carico:

- Sollecitazione nel materiale inferiore all'85% dello snervamento;
- Oppure freccia massima di 1/200 (intesa come deformazione locale diviso lunghezza);
- La verifica del carico ammissibile è subordinata alla capacità di portata degli ancoranti (a cura dell'applicatore).

Oteraccordi S.p.A. reserves the right to change the information contained in this catalogue without notice.

110-05

09SISFI

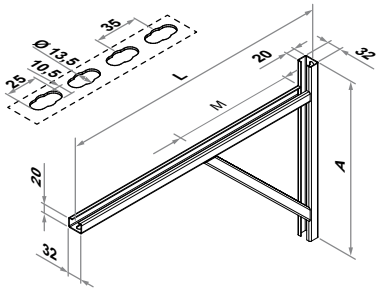

Welded painted wall bracket 32x20

- Material: S235JR EN 10025
- electrolytic galvanizing UNI ISO 2081:2018 sp. 6 ÷ 9 [µm]
- white powder painting RAL 9010

CHARACTERISTICS: bracket with a C-section and with welded angle support. On one of the two sides there is a graduated scale for easier cutting to size at the construction site. The welding of three pieces of 32x20 profile (light clamping system) ensures an excellent resistance to high workloads .The bracket has a closure plug.
USE: the bracket allows you to create the perfect support for hydro-sanitary, electrical, pipeline and air conditioning systems.

CODICE	A [mm]	L [mm]	M [mm]	C		€ Each
11080	300	370	185	1	2	33,58
11090	350	545	265	1	2	41,67

See art. 110-06 for installation Kit

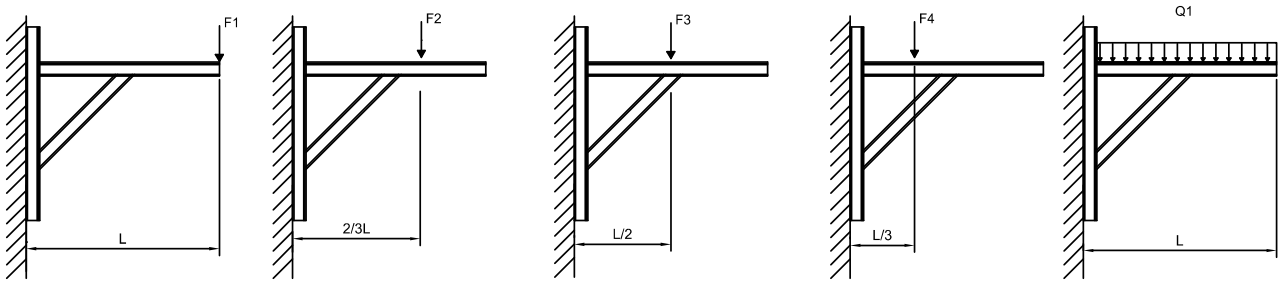

	L = 370 [mm]	L = 545 [mm]
F1 [kg]	82,7	48,3
F2 [kg]	165,4	96,6
F3 [kg]	110,3	64,4
F4 [kg]	124,0	72,5
Q1 [kg/m]	447,0	169,5

Condizioni di carico:

- Sollecitazione nel materiale inferiore all'85% dello snervamento;
- Oppure freccia massima di 1/200 (intesa come deformazione locale diviso lunghezza);
- La verifica del carico ammissibile è subordinata alla capacità di portata degli ancoranti (a cura dell'applicatore).

Oteraccordi S.p.A. reserves the right to change the information contained in this catalogue without notice.

111-01

09SISFI

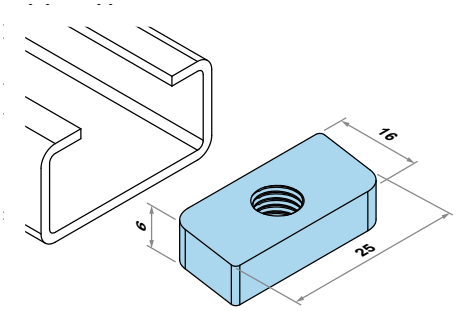

Rectangular Nut

- Material: S235JR EN 10025
- electrolytic galvanizing UNI ISO 2081:2018 sp. 6 ÷ 9 [µm]

CHARACTERISTICS: the rectangular nut is applied with the light fixture series. It has a threaded center hole (female) for screwing the threaded rods M8 and M10 Art. 855-Z.
USE: to make connections between the profiles and threaded rods to fix the collars. It is applied in the groove of the profiles.

CODICE	Ø	mm				€ Each
11100	M8	30x15 - 32x20	120	240	10/100	**0,97**
11110	M10	30x15 - 32x20	140	260	10/100	**0,97**

111-02

09SISFI

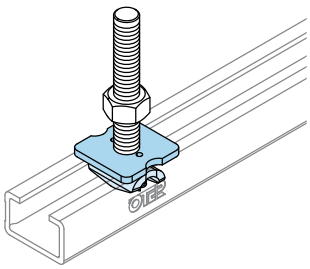

OTER-BLOCK rapid nut

- Material: S235JR EN 10025
- electrolytic galvanizing UNI ISO 2081:2018 sp. 6 ÷ 9 [µm]

CHARACTERISTICS: quick nut is a locking plate which is installed on the profiles / brackets belonging to the light fixture system. It's a special patented system that allows the locking, after a simple 90 ° rotation. It unlocks by rotating other 90 °. It has a central threaded hole (female) for the screwing of the threaded bars M8 and M10 art. 855-Z.
USE: is used to make connections between the collars. It quickly applied in the groove of the profiles. It is the fastest connection in the light fixture system.

CODICE	Ø	mm				€ Each
11120	M8	30x15 - 32x20	150	50	10/100	**3,75**
11130	M10	30x15 - 32x20	150	50	10/100	**3,75**

Oteraccordi S.p.A. reserves the right to change the information contained in this catalogue without notice.

111-03

09SISFI

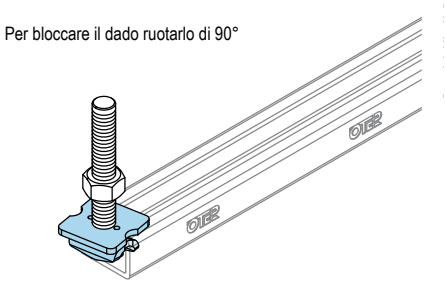

OTER-BLOCK RAPID NUT WITH THREADED ROD

- Material: S235JR EN 10025
- electrolytic galvanizing UNI ISO 2081:2018 sp. 6 ÷ 9 [μm]

CHARACTERISTICS: quick nut threaded socket is the union of a quick self-locking nut art. 111-02, and M8 or M10 threaded rod and a hexagonal nut and it is installed on the profiles / brackets belonging to the light fixture system. It's formed by a particular patented system that allows the locking after a simple 90° rotation. It unlocks by rotating other 90 °. The threaded rods M8 and M10 can be available both in two lengths.
USE: It is used to make connections between the profiles and the clamps. It quickly applies in the groove of the profiles. It is the fastest connection in the light fixture system.

CODICE	Ø		mm				€ Each
11140	M8	32	30x15 - 32x20	150	50	5/100	**4,30**
11150	M8	65	30x15 - 32x20	150	50	5/100	**4,61**
11160	M10	32	30x15 - 32x20	150	50	5/100	**4,44**
11170	M10	65	30x15 - 32x20	150	50	5/100	**4,75**

111-04

09SISFI

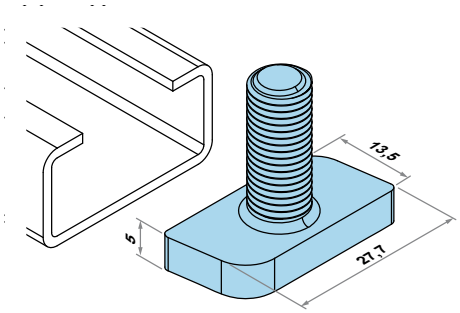

HAMMER HEAD SCREW

- Material: S235JR EN 10025
- electrolytic galvanizing UNI ISO 2081:2018 sp. 6 ÷ 9 [μm]

CHARACTERISTICS:the hammer screw is composed of a rectangular nut Art.111-01 welded to a threaded M8 or M10 bar and it is applied with the light fixture series.
USE: it is used to make connections between the various components and profiles. It can also be used to make connections to the clamps. It can also be used to make connections to the collars. It is applied in the groove of the profiles, turning the hammer screw to 90° and applying a washer and a nut.

CODICE	MxL	mm	Nm				€ Each
11180	M8x30	30x15 - 32x20	20	240	120	10/100	**1,71**
11185	M10x30	30x15 - 32x20	40	270	140	10/100	**2,11**

Oteraccordi S.p.A. reserves the right to change the information contained in this catalogue without notice.

111-05

09SISFI

Hammer head screw with nut and washer

• Material: S235JR EN 10025
• electrolytic galvanizinga UNI ISO 2081:2018 sp. 6 ÷ 9 [µm]

CHARACTERISTICS: the hammer screw is composed of a rectangular nut Art. 111-01 welded to a threaded M8 or M10 bar and it is applied with the light fixture series.
USE:it is used to make connections between the various components and profiles. It can also be used to make connections to the clamps. It is applied in the groove of the profiles, turning the hammer screw to 90° and applying a washer and a nut.

CODICE	MxL	mm	Nm				€ Each
11190	M8x30	30x15 - 32x20	20	240	120	10/100	**2,49**
11195	M10x30	30x15 - 32x20	40	270	140	10/100	**3,04**

112-01

09SISFI

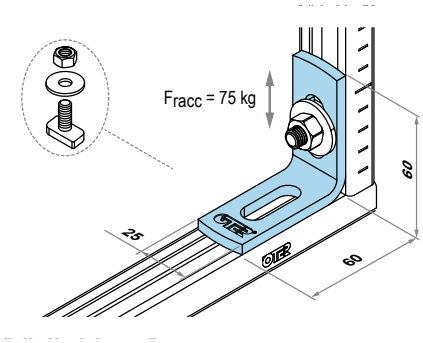

90° Angle connection with 2 holes

• Material: S235JR EN 10025
• electrolytic galvanizing UNI ISO 2081:2018 sp. 6 ÷ 9 [µm]

CHARACTERISTICS: 90 ° angle plate with two holes for the passage of the screw hammer Art. 111-05
USE: the angular plate allows to connect two sections or two profiled sections at 90 ° without welding, for the realization of even complex and articulated structures, for the support of medium-light installations such as electrical systems, wiring, canalization and ventilation.

CODICE	mm	mm	holes [mm] / plate		€ Each
11200	30x15 - 32x20	5	10,5x30	10/100	**2,97**

Oteraccordi S.p.A. reserves the right to change the information contained in this catalogue without notice.

113-01

09SISFI

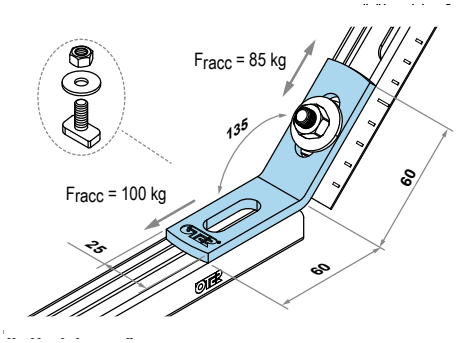

135° Angle connection with 2 holes

- Material: S235JR EN 10025
- electrolytic galvanizing UNI ISO 2081:2018 sp. 6 ÷ 9 [μm]

CHARACTERISTICS: 135° angular plate with two holes for the passage of the hammer screw (Art. 111-05).
USE: the angular plate allows to connect two sections or two profiled sections at 45 ° without welding, for the realization of even complex and articulated structures, for the support of medium-light installations such as electrical systems, wiring, canalization and ventilation.

CODICE	mm	mm	holes [mm] / plate		€ Each
11300	30x15 - 32x20	5	10,5x30	10/100	**3,04**

114-01

09SISFI

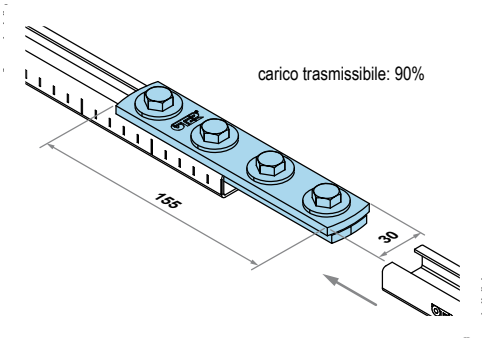

Connection Plate

- Material: S235JR EN 10025
- electrolytic galvanizing UNI ISO 2081:2018 sp. 6 ÷ 9 [μm]

CHARACTERISTICS: the union plate for light profile is equipped with four hex head screws with washers. It's formed by two parallel plates that ensure a reinforcement. The lower plate must be placed into the groove of the two profiles.Two bolts are placed inside a section and the other two bolts are put inside the second section.
USE: it enables to connect two light profiles or two profiled sections in order to create a longitudinal continuity. Both profiles have to have the throat plate facing the union.

CODICE	mm	mm		€ Each
11400	30x15 - 32x20	5	20	**12,16**

Oteraccordi S.p.A. reserves the right to change the information contained in this catalogue without notice.

115-01

09SISFI

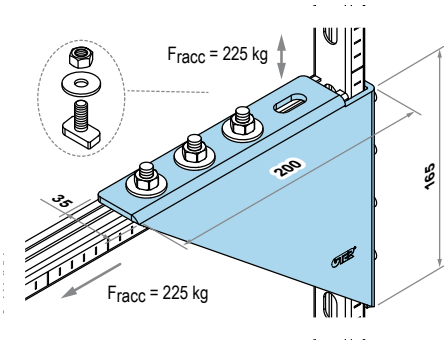

90° Square connection open

- Material: S235JR EN 10025
- electrolytic galvanizing UNI ISO 2081:2018 sp. 6 ÷ 9 [µm]

CHARACTERISTICS: the angular bracket has 8 holes and it is suitable for profiles of light fixture series.
USE: it is an angular reinforcement for the support of shelves and can be used as a connection between two orthogonal profiles, ensuring a high load capacity.It is an ideal support for mounting electrical installations, canalization and conditioning.

CODICE	mm	mm	holes [mm] / plate		€ Each
11500	30x15 - 32x20	4	10,5x23	10	**49,08**

115-02

09SISFI

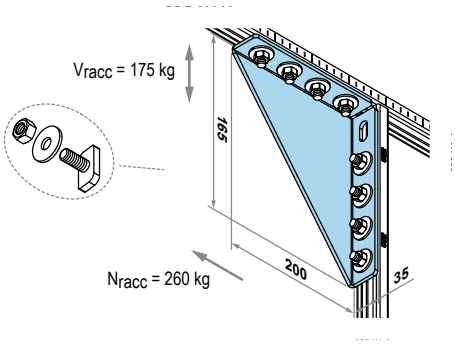

90° Square connection closed

- Material: S235JR EN 10025
- electrolytic galvanizing UNI ISO 2081:2018 sp. 6 ÷ 9 [µm]

CHARACTERISTICS: the angular bracket has 9 holes and it is suitable for profiles of light fixture series.
USE: it is an angular reinforcement for the support of shelves and can be used as a connection between two orthogonal profiles, ensuring a high load capacity.It is an ideal support for mounting electrical installations, canalization and conditioning.

CODICE	mm	mm	holes [mm] / plate		€ Each
11510	30x15 - 32x20	4	10,5x23	10	**49,08**

Oteraccordi S.p.A. reserves the right to change the information contained in this catalogue without notice.

115-03

09SISFI

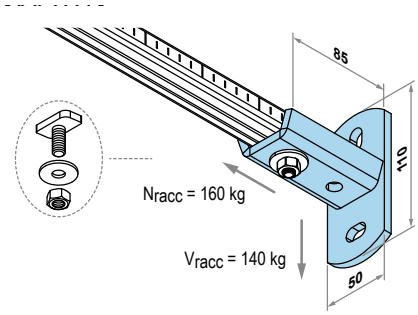

WALL SUPPORT WITH HORIZONTAL JOINT

- Material: S235JR EN 10025
- electrolytic galvanizing UNI ISO 2081:2018 sp. 6 ÷ 9 [μm]

CHARACTERISTICS: the connection between the wall bracket and the profile can take place with two screws hammer Art. 111-05. The groove of the section must always be pointed in the direction of both support attachment holes. Use the wall support with the groove of the profile always facing downwards or upwards (horizontal passage of the installations).
USE: the support bracket is used to realize wall profiles fixing between two archs or ceiling. It can work as a bracket only if a second point of support (reinforcement bracket art. 146-01) is provided.

CODICE	mm	mm	holes [mm] / plate		€ Each
11520	30x15 - 32x20	5	10,5x16	10	9,77

115-04

09SISFI

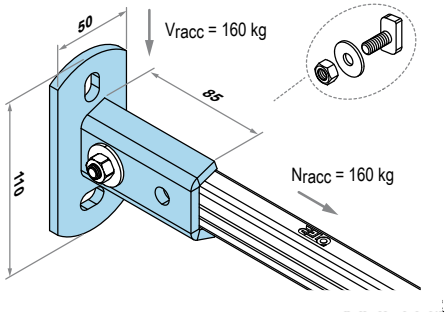

WALL SUPPORT WITH VERTICAL JOINT

- Material: S235JR EN 10025
- electrolytic galvanizing UNI ISO 2081:2018 sp. 6 ÷ 9 [μm]

CHARACTERISTICS: the connection between the wall bracket and the profile can take place with two screws hammer Art. 111-05.The groove of the section must always be pointed in the direction of both the support attachment holes. Use the wall bracket with profile groove always directed to the right or left (vertical passage of the installations).
USE: the support bracket is used to realize wall profile fixings. It's mostly used for the lateral attachment of the clamps or the installations to avoid movements.

CODICE	mm	mm	holes [mm] / plate		€ Each
11530	30x15 - 32x20	5	10,5x16	10	9,77

Oteraccordi S.p.A. reserves the right to change the information contained in this catalogue without notice.

119-01

09SISFI

Hexagonal screw

- Cold forged steel
- electrolytic galvanizing UNI ISO 2081:2018 sp. 6 ÷ 9 [µm]

CHARACTERISTICS: M8 and M10 screw with flanged hex head, suitable for light clamping system.
USE: is used to realize connections between the various components and sections.

CODICE	MxL	mm		€ Each
11900	M8x14	30x15 - 32x20	10/100	**0,52**
11905	M10x15	30x15 - 32x20	10/100	**1,19**

119-02

09SISFI

Washer

- Material: S235JR EN 10025
- electrolytic galvanizing UNI ISO 2081:2018 sp. 6 ÷ 9 [µm]

CHARACTERISTICS: slips into a bolt or threaded rod. Suitable for light clamping system. Conforms to UNI 6592 and ISO 7089.
USE: it is used to fasten the fixture and it is positioned between the head of the screw / hexagonal nut and the element to be fixed.

CODICE	∅ [mm]	mm	mm		€ Each
11920	M8-Ø24	30x15 - 32x20	2	10/100	**0,22**
11925	M10 -Ø30	30x15 - 32x20	2,5	10/100	**0,25**
11930	M12 -Ø37	30x15 - 32x20	3	10/100	**0,34**

Oteraccordi S.p.A. reserves the right to change the information contained in this catalogue without notice.

119-03

09SISFI

Plug

• Material: PVC

CHARACTERISTICS: the PVC plug is installed on the final part of the section. The fixing operation is done by doing a simple pressure of the plug on the end of the section.
USE: it is used as security to close the final part of profiles and to avoid possible cuts, or to prevent the escape of any wiring or to prevent the enter of foreign parts .

CODICE	mm		€ Each
11940	30x15	10/100	**0,74**
11945	32x20	10/100	**0,74**

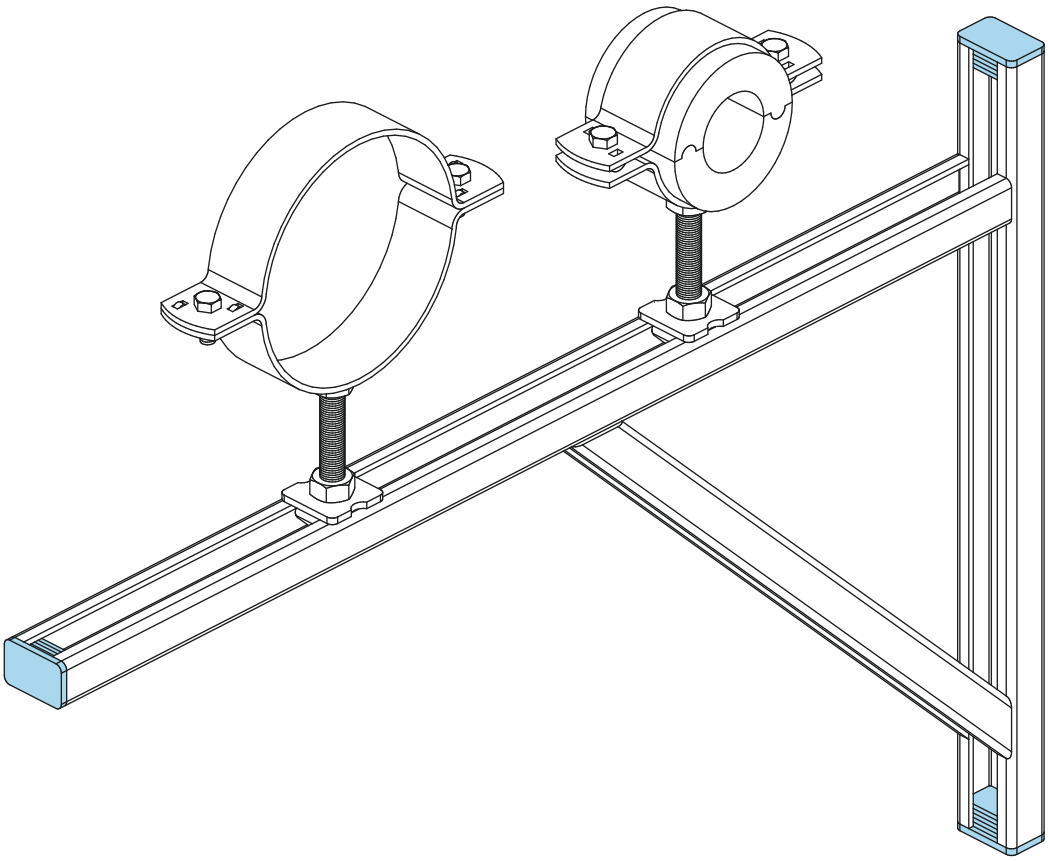

TECHNICAL SPECIFICATIONS PROFILES

		900-30x15	900-32x20
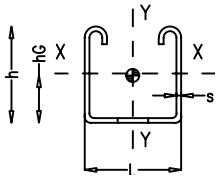		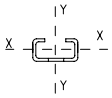	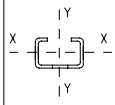
Name		110-01	110-02
Thick profile	s [mm]	1,5	2,5
Height profile	h [mm]	15	20
Widht profile	L [mm]	30	32
Area of the cross section	mm^2	97,50	175,00
Lenght of the rod	m	2,00	2,50
Materials			
Allowable stress	δ_{amm} [N/mm^2]	235	235
Additional safety coefficient		0,85	0,85
Surface treatment			
not provided (stainless steel)		yes	yes
X-X Axis features			
Distanze center of gravity from the bottom profile	h_G [mm]	6,54	8,21
Moment of inertia X axis Ix	I_x [mm^4]	2759	7458
Flexural modulus (fiber stretched on the bottom)	Wyf [mm^3]	421,9	908,4
Flexural modulus (fiber stretched open side)	Wya [mm^3]	326,1	632,6
Radius of gyration	i_x[mm]	5,3	6,5
Allowable moment	M_x [Nm]	65,1	126,4
X-Y Axis features			
Moment of inertia Y axis	I_y [mm^4]	13985	28952
Flexural modulus	W_x [mm^3]	932,3	1809,5
Radius og gyration	i_x[mm]	12,0	12,9
Allowable moment	M_x [Nm]	186,2	361,4

note

note

HEAVY
BRACKETING

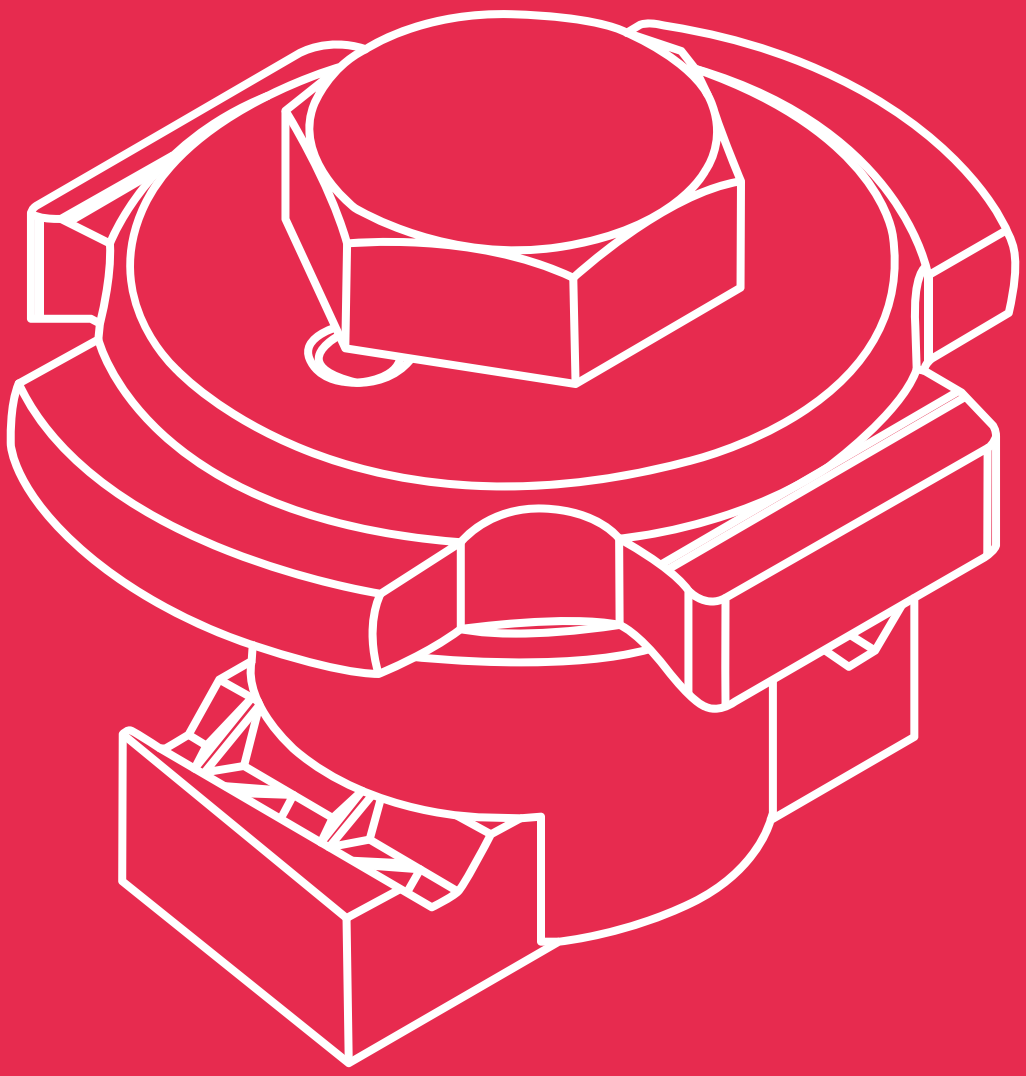

OTER FIX

130-01

09SIPES

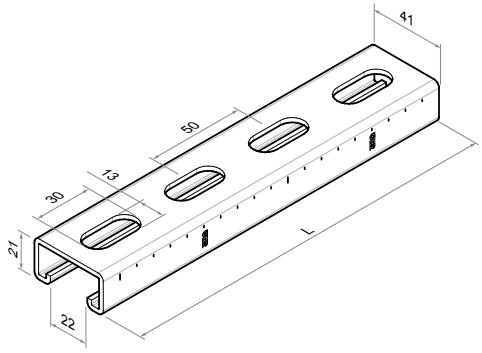

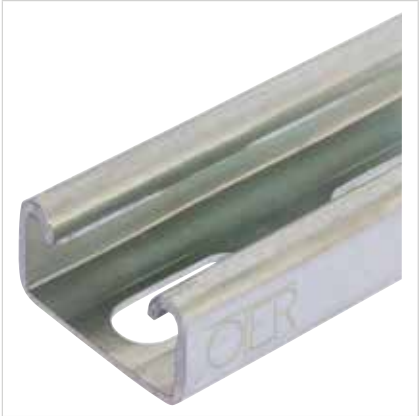

PROFILE: 41x21

• Material: DX51 - Z140 EN 10142 • galvanizing Sendzimir

CHARACTERISTICS: it belongs to the heavy fixture range. It's 2,5 mm thickness and the bars are 3,00 m and 6,00 long.It can be used with all accessories and conponents of heavy fixture.On one side there are graduated marks which help the cutting to measure on site.On the other side there are big holes which allow installation adjustment.

USE: it is used for creation of support structures for civil plants (support cabling, electrical systems, ducting and ventilation) and for small and middle entity plants. The reduced section of the bar makes it particularly suitable in all those situations in which the space is narrow.

CODICE	mm	L [m]	[pz]	€ Each
13000	2,5	3	10	83,57
13001	2,5	6	10	159,19

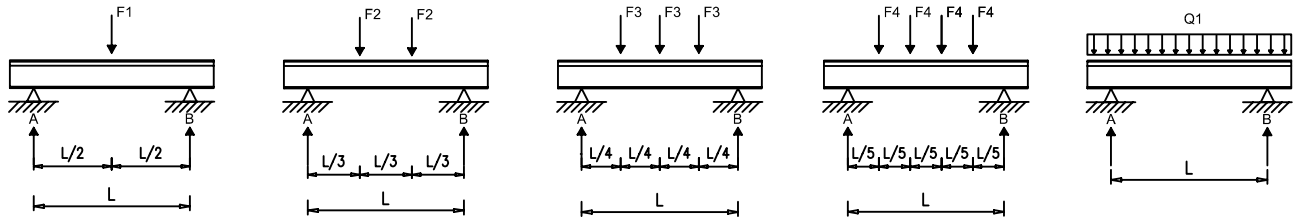

	L = 500 [mm]	L = 1000 [mm]	L = 1500 [mm]	L = 2000 [mm]	L = 2500 [mm]	L = 3000 [mm]
F1 [kg]	115,2	57,6	26,9	15,1	9,7	6,7
F2 [kg]	86,4	38,3	17,0	9,6	6,1	4,3
F3 [kg]	57,6	28,5	12,6	7,1	4,6	3,2
F4 [kg]	48,0	22,7	10,1	5,7	3,6	2,5
Q1 [kg/m]	230,4	96,8	28,7	12,1	6,2	3,6

Condizioni di carico:

- Sollecitazione nel materiale inferiore all’85% dello snervamento;
- Oppure freccia massima di 1/200 (intesa come deformazione locale diviso lunghezza).

Oteraccordi S.p.A. reserves the right to change the information contained in this catalogue without notice.

130-02

09SIPES

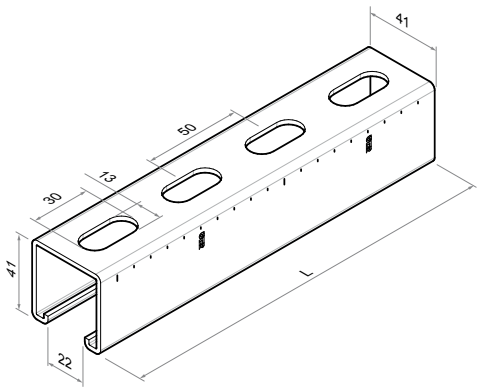

PROFILE: 41x41

- Material: DX51 - Z140 EN 10142
- galvanizing Sendzimir

CHARACTERISTICS: it belongs to the heavy fixture range. It's 2,0 mm or 2,5 mm thickness and the bars are 3,00 mm and 6,00 long.It can be used with all accessories and conponents of heavy fixture.On one side there are graduated marks which help the cutting to measure on site.On the other side there are big holes which allow installation adjustment.

USE: it is used for creation of support structures for civil plants (support cabling, electrical systems, ducting and ventilation) and for middle entity plants.the profile 41x41 is suitable for the realization of supporting structures characterized by loads of great importance.

CODICE	mm	L [m]	[pz]	€ Each
13010	2	3	10	80,36
13011	2,5	3	10	88,53
13012	2,5	3	50	86,55
13013	2,5	6	10	186,04

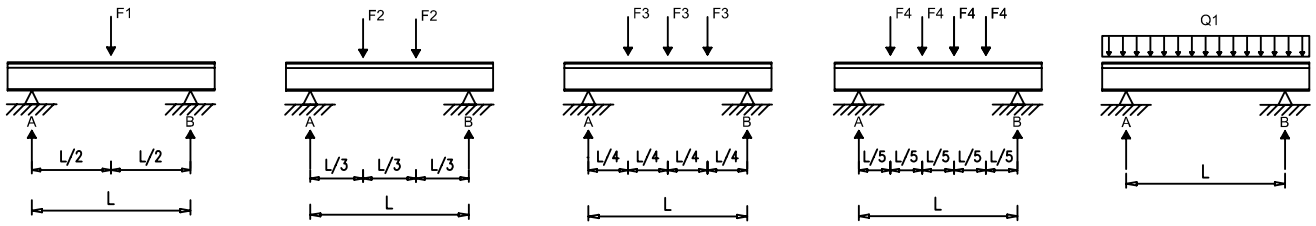

	L = 500 [mm]	L = 1000 [mm]	L = 1500 [mm]	L = 2000 [mm]	L = 2500 [mm]	L = 3000 [mm]
F1 [kg]	312,0	156,0	89,6	50,4	32,3	22,4
F2 [kg]	234,0	117,0	56,7	31,9	20,4	14,2
F3 [kg]	156,0	94,9	42,2	23,7	15,2	10,5
F4 [kg]	130,0	65,0	33,7	18,9	12,1	8,4
Q1 [kg/m]	624,0	312,0	95,6	40,3	20,6	11,9

Condizioni di carico:

- Sollecitazione nel materiale inferiore all'85% dello snervamento;
- Oppure freccia massima di 1/200 (intesa come deformazione locale diviso lunghezza).

Oteraccordi S.p.A. reserves the right to change the information contained in this catalogue without notice.

130-03

09SIPES

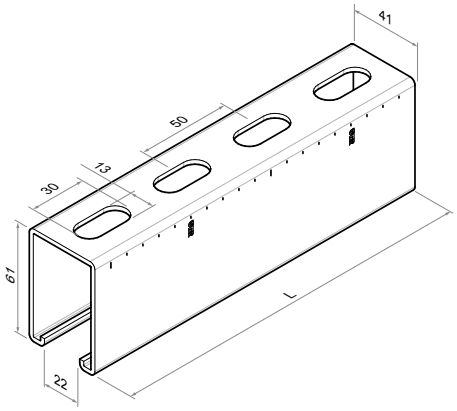

PROFILE: 41x61

- Material: DX51 - Z140 EN 10142
- galvanizing Sendzimir

CHARACTERISTICS:it belongs to the heavy fixture range. It's 2,5 mm thickness and the bars are 3,00 m and 6,00 long.It can be used with all accessories and conponents of heavy fixture.On one side there are graduated marks which help the cutting to measure on site.On the other side there are big holes which allow installation adjustment.

USE: it is used for creation of support structures for civil and industrial plants (support cabling, electrical systems, ducting and ventilation) .the profile 41x61 is suitable for the realization of supporting structures characterized by loads of great importance.

CODICE	mm	L [m]	[pz]	€ Each
13020	2,5	3	10	137,75
13021	2,5	6	10	279,03

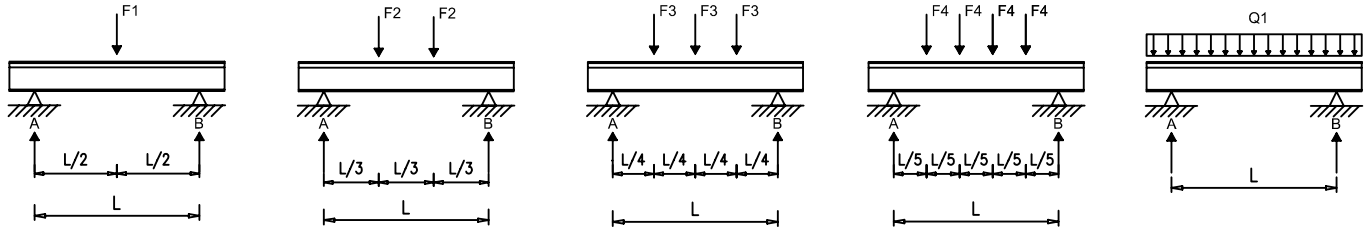

	L = 500 [mm]	L = 1000 [mm]	L = 1500 [mm]	L = 2000 [mm]	L = 2500 [mm]	L = 3000 [mm]
F1 [kg]	592,5	296,2	189,6	106,6	68,3	47,4
F2 [kg]	444,4	222,2	120,0	67,5	43,2	30,0
F3 [kg]	296,2	200,7	89,2	50,2	32,1	22,3
F4 [kg]	246,9	123,4	71,2	40,1	25,6	17,8
Q1 [kg/m]	1185,0	592,5	202,2	85,3	43,7	25,3

Condizioni di carico:

- Sollecitazione nel materiale inferiore all’85% dello snervamento;
- Oppure freccia massima di 1/200 (intesa come deformazione locale diviso lunghezza).

Oteraccordi S.p.A. reserves the right to change the information contained in this catalogue without notice.

130-04

09SIPES

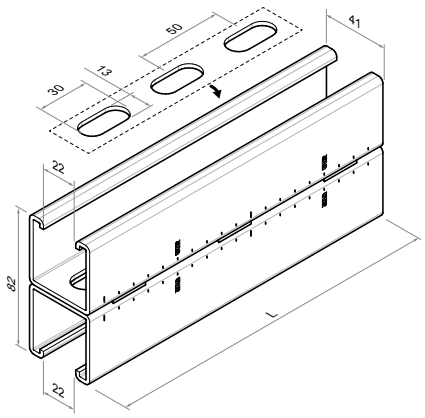

PROFILE: 41x82

• Material: DX51 - Z140 EN 10142 • galvanizing Sendzimir

CHARACTERISTICS: it belongs to the heavy fixture range. It's 2.5 mm thickness and the bars have a length of 3,00 m 6,00 m. It' compatible with all accessories and components belonging to the heavy fixture. It 's a double profile given by the union of two 41x41 profiles.Its peculiar structure makes it ideal all times that need to be clamped installations at different heights, but which, for reasons of space , should all insist on a single support structure. On one side there are graduated marks which facilitate the cutting to length on site also. Inside the two folds of the section is present an indentation which facilitates grip of the coupling components , improving the sliding seal. The section therefore has two grooves.
USE: it is used for creation of support structures for civil plants (support cabling, electrical systems, ducting and ventilation)

CODICE	mm	L [m]	[pz]	€ Each
13030	2,5	3	10	247,24
13031	2,5	6	10	513,92

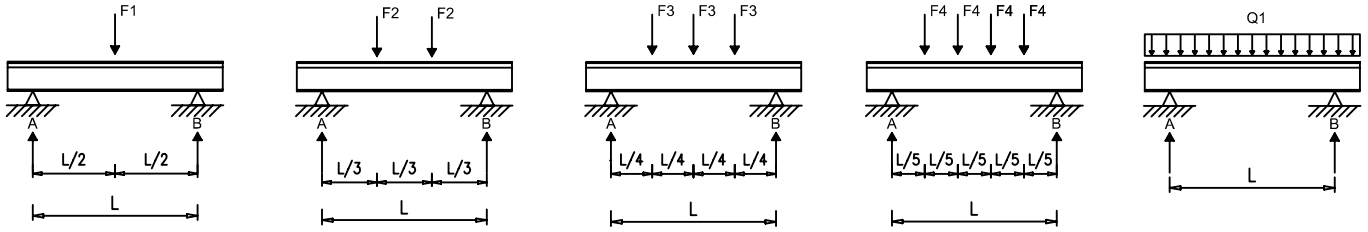

	L = 500 [mm]	L = 1000 [mm]	L = 1500 [mm]	L = 2000 [mm]	L = 2500 [mm]	L = 3000 [mm]
F1 [kg]	683,0	341,5	206,8	116,3	74,4	51,7
F2 [kg]	512,3	256,1	130,8	73,6	47,1	32,7
F3 [kg]	341,5	218,9	97,3	54,7	35,0	24,3
F4 [kg]	284,6	142,3	77,7	43,7	28,0	19,4
Q1 [kg/m]	1366,0	683,0	220,5	93,0	47,6	27,6

Condizioni di carico:
- Sollecitazione nel materiale inferiore all’85% dello snervamento;
- Oppure freccia massima di 1/200 (intesa come deformazione locale diviso lunghezza).

Oteraccordi S.p.A. reserves the right to change the information contained in this catalogue without notice.

130-10

09SIPES

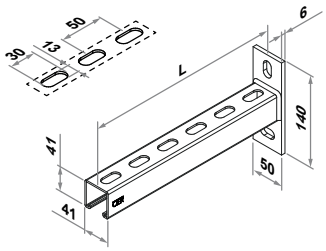

HEAVY WALL BRACKET 41x41

• Material: DX51 - Z140 EN 10142 • electrolytic galvanizing UNI ISO 2081:2018 sp. 6 ÷ 9 [µm]

CHARACTERISTICS: heavy bracket support with section C. Inside the two folds of the section there is an indentation which facilitates the taking and keeping of quick coupling components, for improving the sliding seal. On one side it is present a graduated marks for easier cutting to size at the construction site. The fixing plate has two holes to allow a greater flexibility for the attachment of the same to the base material (wall, ceiling, floor) both horizontally and vertically, through the use of anchors. The welding along the entire perimeter of the profile 41x41 to the plate ensures excellent resistance to high workloads . It has a locking plug.
USE: The bracket allows you to create the perfect support for hydro-sanitary, electrical, pipeline and air conditioning systems.

CODICE	mm	L [mm]	holes [mm] / plate		€ Each
13040	2,5	300	13x25	5	**25,26**
13041	2,5	400	13x25	5	**29,32**
13042	2,5	500	13x25	2	**33,40**
13043	2,5	600	13x25	2	**36,66**
13044	2,5	1000	13x25	2	**65,16**

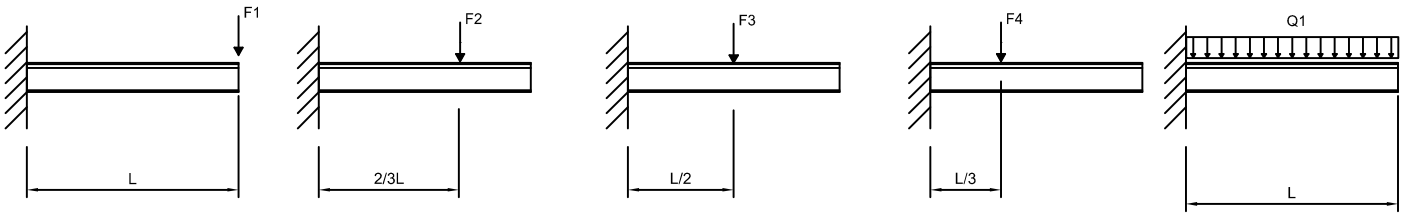

	L = 300 [mm]	L = 400 [mm]	L = 500 [mm]	L = 600 [mm]	L = 1000 [mm]
F1 [kg]	123,2	69,3	44,4	30,8	11,1
F2 [kg]	192,5	144,4	115,5	96,3	57,8
F3 [kg]	256,7	192,5	154,0	128,3	77,0
F4 [kg]	385,0	288,8	231,0	185,1	66,6
Q1 [kg/m]	427,8	240,6	154,0	106,9	29,6

Condizioni di carico:
- Sollecitazione nel materiale inferiore all'85% dello snervamento;
- Oppure freccia massima di 1/200 (intesa come deformazione locale diviso lunghezza);
- La verifica del carico ammissibile è subordinata alla capacità di portata degli ancoranti (a cura dell'applicatore).

Oteraccordi S.p.A. reserves the right to change the information contained in this catalogue without notice.

130-11

09SIPES

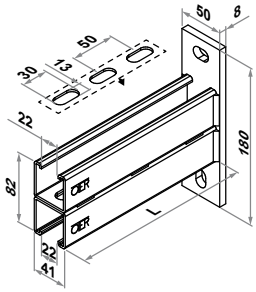

DOUBLE WALL BRACKET 41x82

• Material: DX51 - Z140 EN 10142 • electrolytic galvanizing UNI ISO 2081:2018 sp. 6 ÷ 9 [µm]

CHARACTERISTICS:heavy double bracket with support H section . Inside the four folds of the section there is an indentation which facilitates the taking and keeping of quick coupling components, belonging to the heavy clamping system by improving the tightness for sliding. On one side is present a graduated scale for easier cutting to size at the construction site. The fixing plate has two holes to allow the attachment to the base material (wall, ceiling, floor) through the use of two anchors. The welding along the entire perimeter of the profile 41x82 ensures excellent resistance to high workloads.
USE: the double bracket allows you to create the perfect support for hydro-sanitary, industrial, electrical, pipeline and air conditioning systems.

CODICE	mm	L [mm]	holes [mm] / plate		€ Each
13050	2,5	500	13x25	1	**73,07**
13051	2,5	600	13x25	1	**76,56**
13052	2,5	700	13x25	1	**86,99**
13053	2,5	800	13x25	1	**92,68**
13054	2,5	900	13x25	1	**81,03**
13055	2,5	1000	13x25	1	**85,70**

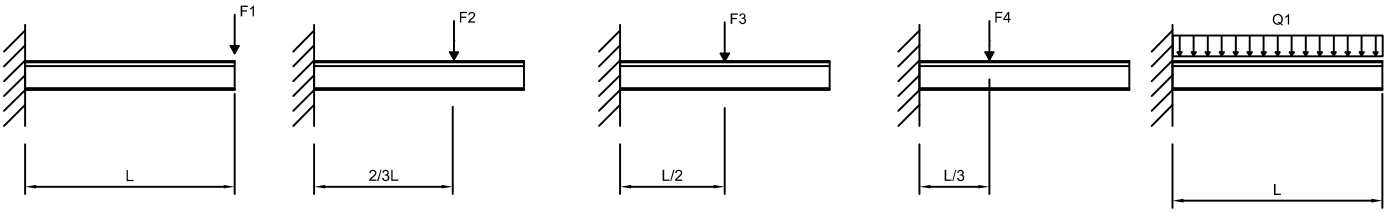

	L = 500 [mm]	L = 600 [mm]	L = 700 [mm]	L = 800 [mm]	L = 900 [mm]	L = 1000 [mm]
F1 [kg]	92,7	64,4	47,3	36,2	28,6	23,2
F2 [kg]	241,5	201,3	172,5	150,9	134,2	120,8
F3 [kg]	322,0	268,3	230,0	201,3	178,9	161,0
F4 [kg]	483,0	387,0	284,3	217,7	172,0	139,3
Q1 [kg/m]	322,0	223,6	164,3	120,8	84,8	61,8

Condizioni di carico:
- Sollecitazione nel materiale inferiore all'85% dello snervamento;
- Oppure freccia massima di 1/200 (intesa come deformazione locale diviso lunghezza);
- La verifica del carico ammissibile è subordinata alla capacità di portata degli ancoranti (a cura dell'applicatore).

Oteraccordi S.p.A. reserves the right to change the information contained in this catalogue without notice.

130-12

09SIPES

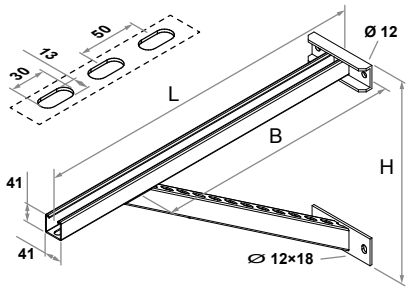

Welded wall bracket

- Material: S235JR EN 10025
- electrolytic galvanizing UNI ISO 2081:2018 sp. 6 ÷ 9 [µm]

CHARACTERISTICS: heavy bracket support with C-section and welded angular support. Inside the two folds of the profile there is an indentation which facilitates the taking and keeping of quick coupling components, thus improving the tightness for sliding. On one side it is present a graduated scale for easier cutting to size at the construction site. The fixing plate has two holes and two circular holes to allow bracket fastening to the base material through the use of four dowels. The welding provides excellent resistance to high workloads.
USE: welded bracket allows to realize the ideal support for industrial hydro-sanitary, electrical, pipeline and air conditioning systems.

CODICE	mm	BxH[mm]	L [mm]		€ Each
13060	41x41	560x450	750	1	**247,61**

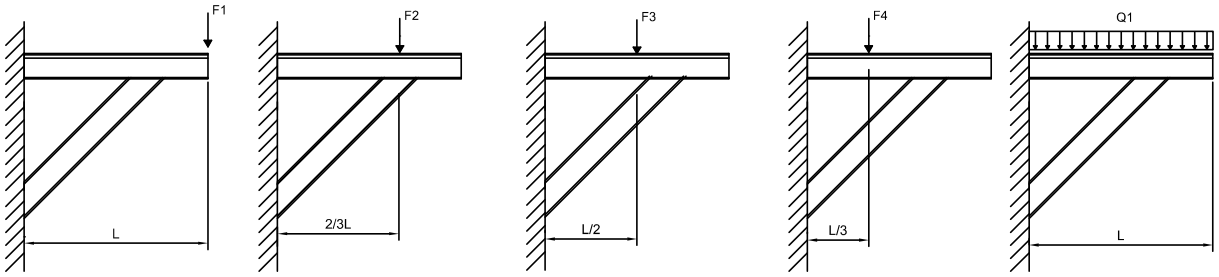

	L = 750 [mm]
F1 [kg]	96,7
F2 [kg]	267,5
F3 [kg]	122,5
F4 [kg]	156,9
Q1 [kg/m]	328,4

Condizioni di carico:

- Sollecitazione nel materiale inferiore all'85% dello snervamento;
- Oppure freccia massima di 1/200 (intesa come deformazione locale diviso lunghezza);
- La verifica del carico ammissibile è subordinata alla capacità di portata degli ancoranti (a cura dell'applicatore).

Oteraccordi S.p.A. reserves the right to change the information contained in this catalogue without notice.

120-01

09SIPES

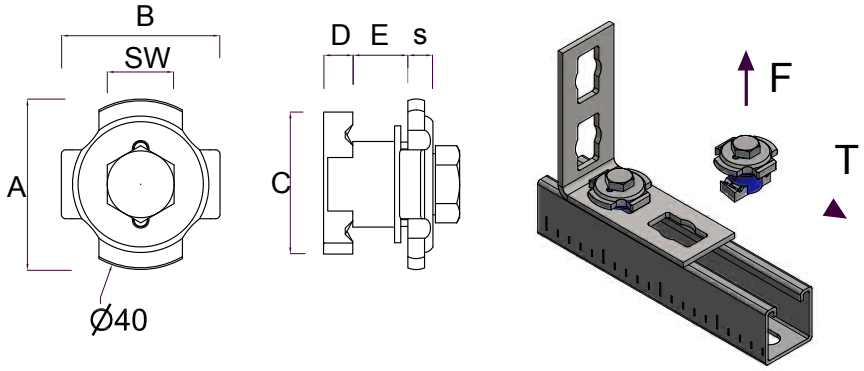

OTER BULL – Quick nut

- Material : screw M10: steel 8.8 ISO DIN 933, nut: steel S235JR EN 10025, washer: steel DD11 EN 10111, plastic part: polypropylene(PP)
- Electrolytic galvanisation: UNI ISO 2081 : 2018 sp. 6÷9 µm

CHARACTERISTICS: Compact connection system between accessories and profiles. This saves time. Easy to handle. One bolt for all connections and profiles. Easy to disassemble. Easy to remove and reusable.
USE: the quick nut allows connection between all profiles and accessories belonging to the rapid industrial system. It fits inside the shape of the accessory element and is rotated by 90°. To tighten the bolt use a wrench.

CODICE	A [mm]	B [mm]	C [mm]	D [mm]	E [mm]	SW [mm]	s [mm]	F (kg)	T [kg]	€ Each
12000	40	36	32	7	19	17	6	500	300	**4,50**

120-02

09SIPES

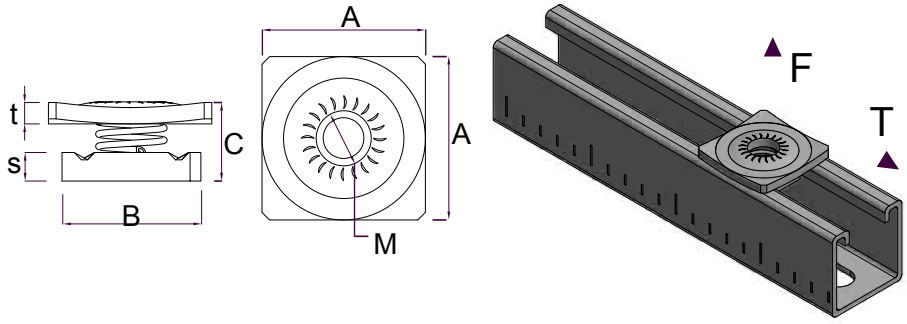

Base plate for threaded bar connection M8 - M10 - M12

- Material: Grooved nut and square steel washer hardness min.130 HB (440 N/mm2)
- Electrolytic galvanisation UNI ISO 2081 : 2018 th. 6÷9 µm

USE: it fits inside the profile and rotates it by 90°. The plate has a double knurling that allows a perfect adherence to the bending of the profile. Already assembled and very quick to install. The patented spring system allows you to slide the plate until you reach the desired point before the final tightening.

CODICE	A [mm]	B [mm]	C [mm]	M [mm]	s [mm]	t [mm]	F (kg)	T [kg]	€ Each
12010	41	34	19	M 8	6	5	600	240	**3,47**
12020	41	34	19	M 10	8	5	700	350	**3,61**
12030	41	34	19	M 12	9	5	700	400	**3,74**

Oteraccordi S.p.A. reserves the right to change the information contained in this catalogue without notice.

120-03

09SIPES

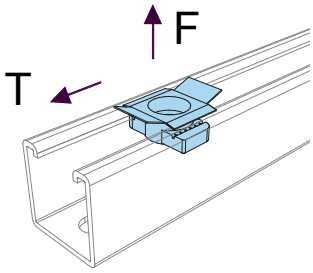

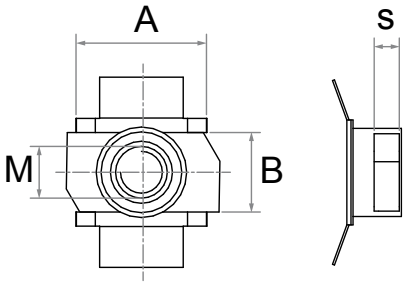

Quick nut with plastic tabs

- Material: S 235 JR EN 10025 hardness min. 130 HB (440 N/mm2)
- Galvanizing according to the standard DIN EN ISO 4042

CHARACTERISTICS: quick connection system between threaded bars or collars and profiles. With a simple rotation the fixing is guaranteed and assured .
USE: you fit inside the profile and you rotate it by 90°. The plate has a double knurling that allows a perfect adherence to the bending of the profile. Already assembled and very quick to install. The patented spring system allows you to slide the plate until you reach the desired point before the final tightening.

CODICE	A [mm]	B [mm]	M [mm]	s [mm]	F (kg)	T [kg]	€ Each
12040	31	17	M 8	6	600	240	**1,38**
12050	31	17	M 10	8	700	350	**1,52**
12060	31	17	M 12	9	700	400	**1,80**

120-04

09SIPES

Base plate with threaded socket

- Material: grooved nut and square steel washer hardness min.130 HB (440 N/m²)
- Threaded socket S235JR EN10025
- Hexagonal nut in cold –pressed steel
- Electro-galvanization UNI ISO 2081:2018 th. 6 ÷ 9 [µm]

CHARACTERISTICS: it's used on profile/wall bracket. By rotating the plate by 90°, the nut is quickly and easily locked inside the edges of the profile. It can be used also for installation on already assembled profiles/wall brackets.
USE: For connecting profiles and clamps.

CODICE	Ø	mm	L [mm]	F (kg)	T [kg]	€ Each
12065	M8	41x21/41/61/82	30	600	240	**3,79**
12070	M8	41x21/41/61/82	50	600	240	**3,89**
12075	M8	41x21/41/61/82	100	600	240	**4,33**
12080	M10	41x21/41/61/82	30	700	350	**4,33**
12085	M10	41x21/41/61/82	50	700	350	**4,43**
12090	M10	41x21/41/61/82	100	700	350	**4,87**
12095	M12	41x21/41/61/82	50	700	400	**5,41**

Oteraccordi S.p.A. reserves the right to change the information contained in this catalogue without notice.

121-01

09SIPES

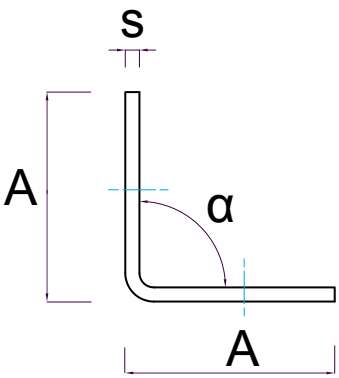

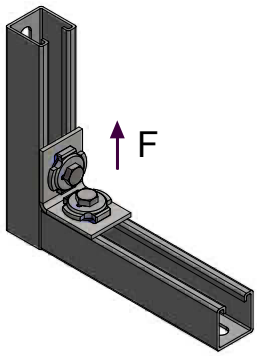

90° Angular with two bolts

- Material: S 235 JR EN 10025
- Electrolytic Galvanisation UNI ISO 2081 : 2018 sp. 6÷9 µm

CHARACTERISTICS: 90° angular plate with two holes to insert two OTER BULL quick nuts .
USE: it allows connections to 90° of two profiles without welding them. Used for the realization of even complex structures for pipes support of hydro-sanitary or industrial plants. Both profiles must have the throat facing the angular.

CODICE	A [mm]	s [mm]	α	F (kg)	€ Each
12100	59	4	90°	300	3,94

121-02

09SIPES

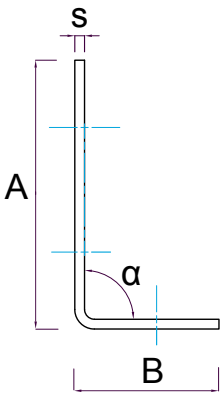

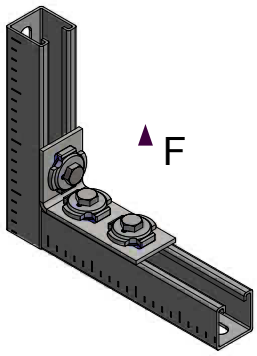

90° Angular with three bolts

- Material : S 235 JR EN 10025
- Electrolytic galvanisation UNI ISO 2081 : 2018 sp. 6÷9 µm

CHARACTERISTICS: 90° angular plate with three holes to insert three Oter Bull quick nuts.
USE: it allows connections to 90° of two profiles without welding them. Used for the realization of even complex structures for pipes support of hydro-sanitary or industrial plants. Both profiles must have the throat facing the angular

CODICE	A [mm]	B [mm]	s [mm]	α	F (kg)	€ Each
12110	110	59	4	90°	400	4,34

Oteraccordi S.p.A. reserves the right to change the information contained in this catalogue without notice.

121-03

09SIPES

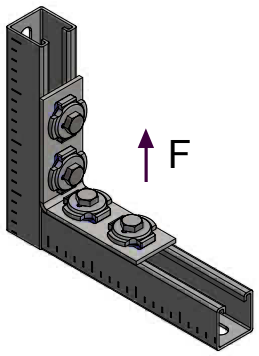

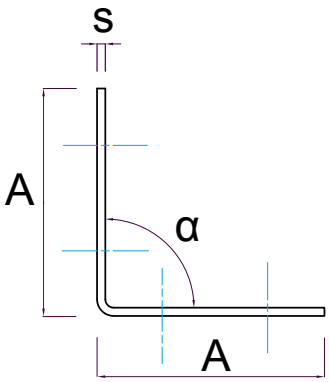

90° Angular with four bolts

• Material : S 235 JR EN 10025

• Electrolytic galvanisation UNI ISO 2081 : 2018 sp. 6÷9 µm

CHARACTERISTICS: 90° angular plate with four holes to insert four Oter Bull quick nuts
USE: it allows connections to 90° of two profiles without welding them. Used for the realization of even complex structures for pipes support of hydro-sanitary or industrial plants. Both profiles must have the throat facing the angular.

CODICE	A [mm]	s [mm]	α	F (kg)	€ Each
12120	110	4	90°	500	**5,25**

121-04

09SIPES

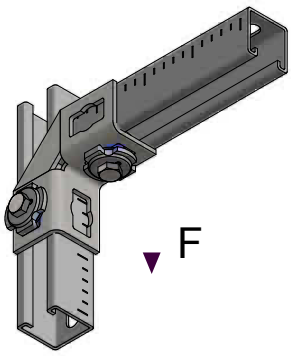

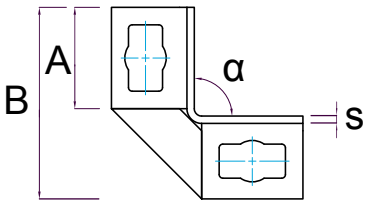

90° Two-dimensional angular with two nuts

• Material : S 235 JR EN 10025

• Electrolytic galvanisation UNI ISO 2081 : 2018 sp. 6÷9 µm

CHARACTERISTICS: two-dimensional 90°angular plate with four holes to insert two Oter Bull quick nuts.
USE: it allows two dimensional 90°connections ° without using welding. It allows the union of two profiles for the realization of even complex structures for the support of pipes of hydro-sanitary or industrial plants. Both profiles must have the throat facing the angular

CODICE	A [mm]	B [mm]	s [mm]	α	F (kg)	€ Each
12130	55	104	4	90°	300	**17,06**

Oteraccordi S.p.A. reserves the right to change the information contained in this catalogue without notice.

121-05

09SIPES

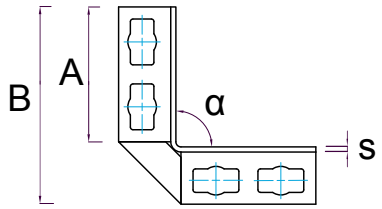

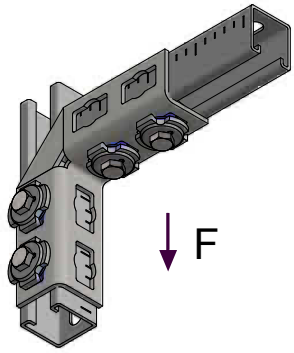

90° Two dimensional angular with four nuts

- Material: S 235 JR EN 10025
- Electrolytic galvanisation UNI ISO 2081 : 2018 sp. 6÷9 µm

CHARACTERISTICS: two-dimensional 90° angular plate with 8 holes to insert four Oter Bull quick nuts.
USE: it allows two dimensional 90°connections without using welding. It allows the union of two profiles for the realization of even complex structures for the support of pipes of hydro-sanitary or industrial plants. Both profiles must have the throat facing the angular.

CODICE	A [mm]	B [mm]	s [mm]	α	F (kg)	€ Each
12140	106	155	4	90°	500	**24,93**

122-01

09SIPES

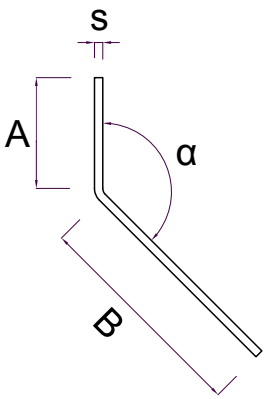

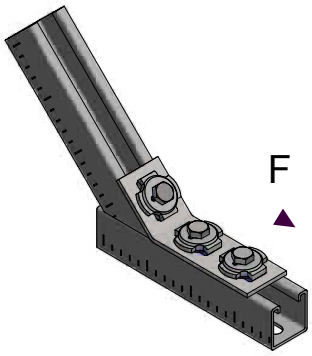

135° Angular with three nuts

- Material: S 235 JR EN 10025
- Electrolytic galvanisation UNI ISO 2081 : 2018 sp. 6÷9 µm

CHARACTERISTICS:135° angular plate with three holes to insert three Oter Bull quick nuts.
USE: it allows 135°connections without using welding. It is often used to create reinforcement brackets. Both profiles must have the throat facing the angular

CODICE	A [mm]	B [mm]	s [mm]	α	F (kg)	€ Each
12200	54	106	4	135°	300	**3,67**

Oteraccordi S.p.A. reserves the right to change the information contained in this catalogue without notice.

122-02

09SIPES

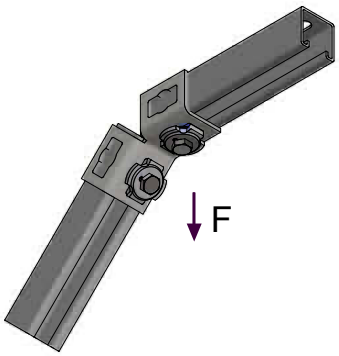

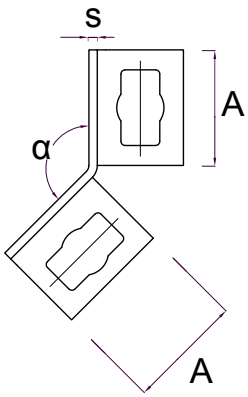

Two-dimensional 135° angular with two nuts

- Material: S 235 JR EN 10025
- Electrolytic galvanisation UNI ISO 2081 : 2018 sp. 6÷9 µm

CHARACTERISTICS: 135° angular connection with four holes to insert two Oter Bull quick nuts. For two profiles connection at 135
USE: it allows 135°connections without using welding. It allows greater flexibility in the orientation of the two profiles.

CODICE	A [mm]	s [mm]	α	F (kg)	€ Each
12210	55	4	135°	300	**14,44**

122-03

09SIPES

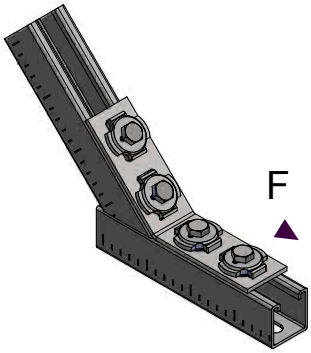

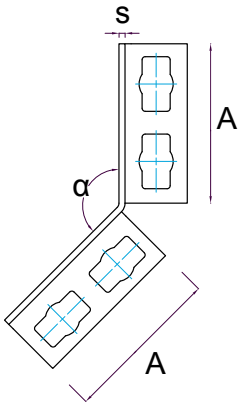

135° Angular with four nuts

- Material : S 235 JR EN 10025
- Electrolytic galvanisation UNI ISO 2081 : 2018 sp. 6÷9 µm

CHARACTERISTICS: 135° angular connection with eight holes to insert four Oter Bull quick nuts. For two profiles connection at 135°.
USE: it allows 135°connections without using welding. It's often used to reinforce brackets.

CODICE	A [mm]	s [mm]	α	F (kg)	€ Each
12220	105	4	135°	500	**23,61**

Oteraccordi S.p.A. reserves the right to change the information contained in this catalogue without notice.

123-01

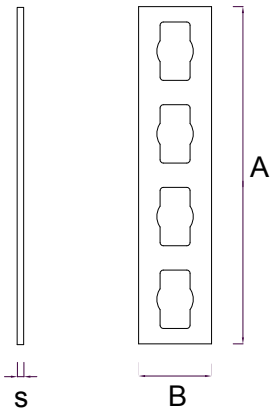

09SIPES

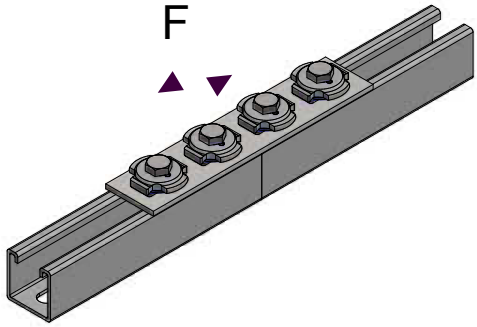

Flat longitudinal connection with 4 bolts

- Material: S 235 JR EN 10025
- Electrolytic galvanisation UNI ISO 2081 : 2018 sp. 6÷9 µm

CHARACTERISTICS: linear connection of two profiles with four holes to insert four Oter Bull quick nuts.
USE: it allows the connection of two profiles using four quick nuts without using welding. Both profiles must have the same orientation.

CODICE	A [mm]	B [mm]	s [mm]	F (kg)	€ Each
12300	208	45	4	250	**4,60**

123-02

09SIPES

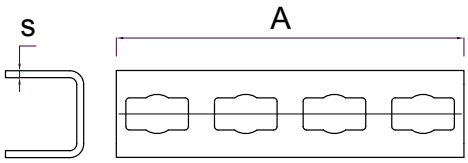

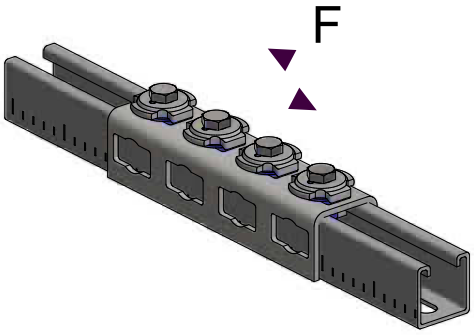

Three-dimensional longitudinal connection with 4 bolts

- Material : S 235 JR EN 10025
- Electrolytic galvanisation UNI ISO 2081 : 2018 sp. 6÷9 µm

CHARACTERISTICS: linear connection of two profiles with 12 holes to insert four Oter Bull quick nuts.
USE: it allows the connection of two profiles using four quick nuts without using welding. Profiles may have different orientation. It allows greater flexibility in the orientation of the two profiles.

CODICE	A [mm]	s [mm]	F (kg)	€ Each
12310	200	4	500	**23,61**

Oteraccordi S.p.A. reserves the right to change the information contained in this catalogue without notice.

124-01

09SIPES

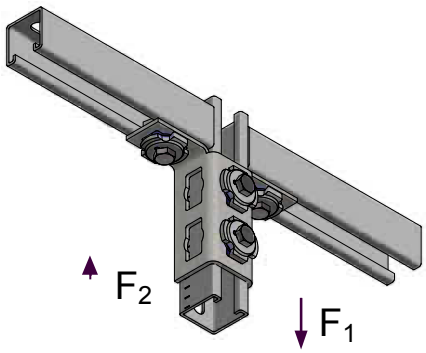

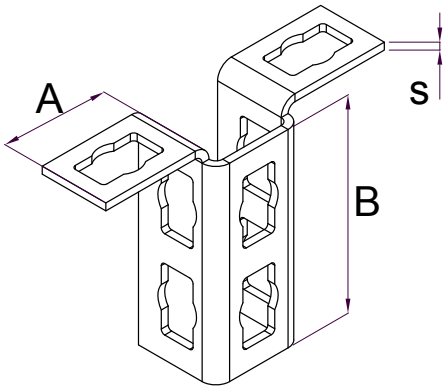

Bi-directional T-Bolt connection with 4 bolts

- Material: S 235 JR EN 10025
- Electrolytic galvanisation UNI ISO 2081 : 2018 sp. 6÷9 µm

CHARACTERISTICS: "T" flexible connection for profile orientation. Eight holes allow profiles orientation flexibility.
USE: it's used to create T-profile unions by using four Oter Bull bolts. Used for the construction of rack structures and support structures for different types of installations. Flexible in the orientation of profiles

CODICE	A [mm]	B [mm]	s [mm]	F_1 [kg]	F_2 [kg]	€ Each
12400	60	110	4	500	400	**41,97**

124-02

09SIPES

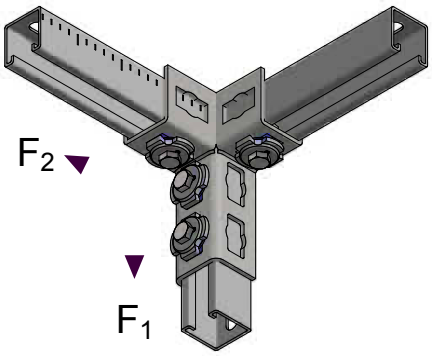

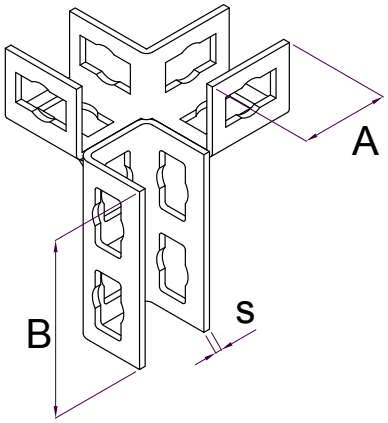

Three-dimensional three way angular right

- Material : S 235 JR EN 10025
- Electrolytic galvanisation UNI ISO 2081 : 2018 sp. 6÷9 µm

CHARACTERISTICS: three-dimensional three-way connection with 12 holes to insert four Oter Bull. Used for connecting three profiles arranged in three ways. Profiles may have different orientations.
USE:it allows 3D connections at 90°. It allows to create three-dimensional structures and greater flexibility in the orientation of profiles.
Used for rack structures and installation support structures.

CODICE	A [mm]	B [mm]	s [mm]	F_1 [kg]	F_2 [kg]	€ Each
12410	55	110	4	500	300	**34,10**

Oteraccordi S.p.A. reserves the right to change the information contained in this catalogue without notice.

124-03

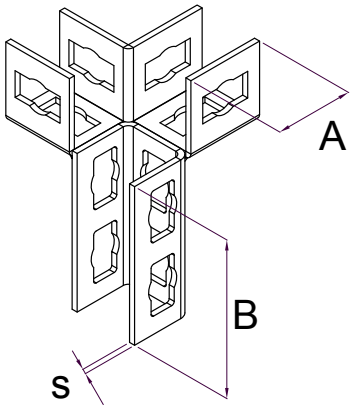

09SIPES

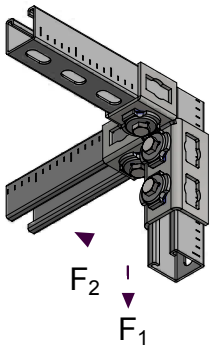

THREE-DIMENSIONAL THREE WAY ANGULAR LEFT

- Material: S 235 JR EN 10025
- Electrolytic galvanisation UNI ISO 2081 : 2018 sp. 6÷9 µm

CHARACTERISTICS: three-dimensional three-way connection with 12 holes to insert four Oter Bull. Used for connecting three profiles arranged in three ways. Profiles may have different orientations.
USE: it allows 3D connections at 90°. It allows to create three-dimensional structures and greater flexibility in the orientation of profiles.
Used for rack structures and installation support structures.

CODICE	A [mm]	B [mm]	s [mm]	F_1 [kg]	F_2 [kg]	€ Each
12420	55	110	4	500	300	**34,10**

124-04

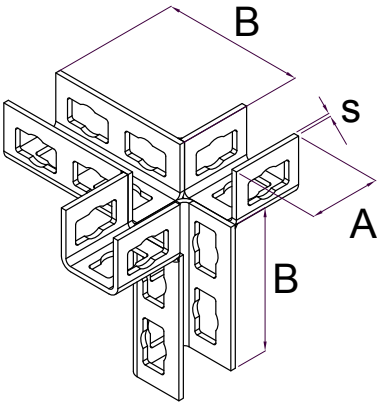

09SIPES

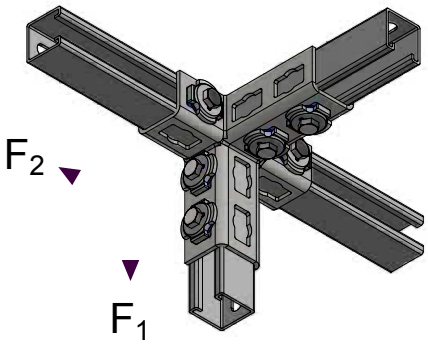

THREE-DIMENSIONAL FOUR WAY ANGULAR

- Material: S 235 JR EN 10025
- Electrolytic galvanisation UNI ISO 2081 : 2018 sp. 6÷9 µm

CHARACTERISTICS:three-dimensional four-way connection with 18 holes to insert 6 Oter Bull quick nuts for connecting up to four profiles.
USE: allows multiple connections at 90°. It allows to realize even complex three-dimensional structures. The presence of 18 holes allows greater flexibility in the orientation of profiles. Used for rack structures and support for even complex installations

CODICE	A [mm]	B [mm]	s [mm]	F_1 [kg]	F_2 [kg]	€ Each
12430	55	110	4	500	300	**71,82**

Oteraccordi S.p.A. reserves the right to change the information contained in this catalogue without notice.

125-01

09SIPES

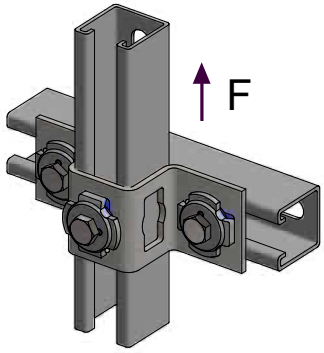

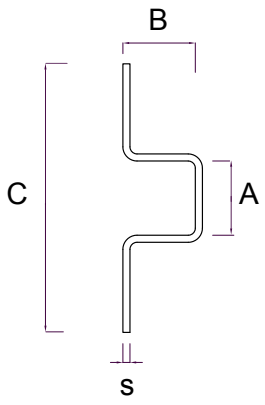

PLATE FOR PROFILE 41X41

- Material: S 235 JR EN 10025
- Electrolytic galvanisation UNI ISO 2081 : 2018 sp. 6÷9 µm

CHARACTERISTICS: The plate has five holes to insert 3 Oter Bull quick nuts. It is suitable for the orthogonal union of two profiles.
USE: it's a joining plate for two profiles arranged orthogonally. One of these profiles (the above one) must be of section 41x41. It is used with three quick nuts Oter Bull.

CODICE	A [mm]	B [mm]	C [mm]	s [mm]	F (kg)	€ Each
12500	42	41	152	4	300	**15,94**

126-01

09SIPES

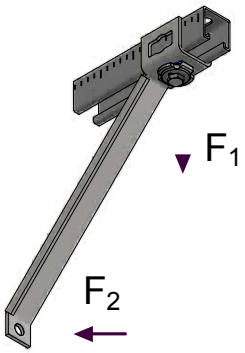

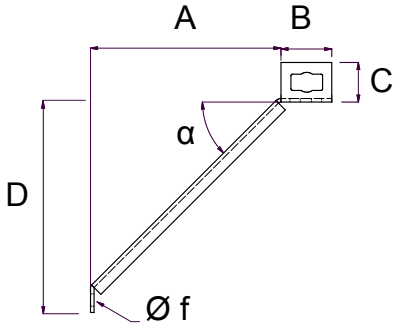

BRACKET REINFORCEMENT WITH A BOLT AND DOWEL

- Material: S 235 JR EN 10025
- Electrolytic galvanisation UNI ISO 2081 : 2018 sp. 6÷9 µm

CHARACTERISTICS: 2D plate with two holes allows the reinforcement of a bracket both transversally and longitudinally to the installation.
USE: long wall reinforcement for brackets. It is used when the bracket is particularly heavy to require a second support point. It can also be used to create longitudinal wall bracings to counteract thermal expansion, create fixed points or counteract seismic action. It is used with a Oter Bull quick nut and a dowel.

CODICE	A [mm]	B [mm]	C [mm]	D [mm]	Ø f [mm]	α	F_1 [kg]	F_2 [kg]	€ Each
12600	455	58	45	480	14	45°	300	300	**43,97**

Oteraccordi S.p.A. reserves the right to change the information contained in this catalogue without notice.

127-01

09SIPES

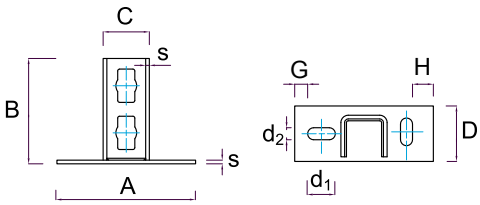

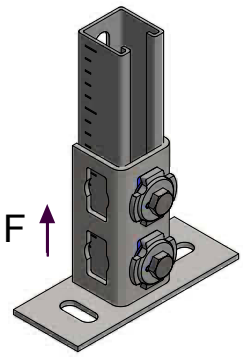

Base profile with two fasteners and two bolts

- Material: S 235 JR EN 10025
- Electrolytic galvanisation UNI ISO 2081 : 2018 sp. 6÷9 µm

CHARACTERISTICS: base plate equipped with 6 holes to allow each orientation of the profile to be connected to the base material through two dowels .
USE: it allows connecting profiles 41x21, 41x41 and 41x61 to the base material (floor, wall or ceiling). It requires two Oter Bull quick nuts and two dowels.

CODICE	A [mm]	B [mm]	C [mm]	D [mm]	d_1 [mm]	d_2 [mm]	G [mm]	H [mm]	s [mm]	F (kg)	€ Each
12700	150	114	50	60	13	30	14	22,5	4	500	**30,57**

127-02

09SIPES

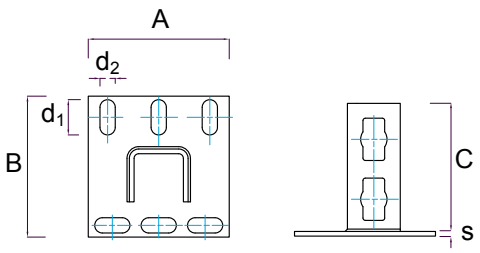

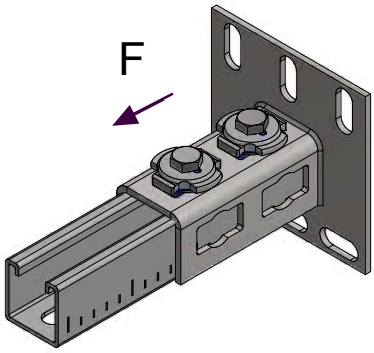

Base profile with six fasteners and two bolts

- Material: S 235 JR EN 10025
- Electrolytic galvanisation UNI ISO 2081 : 2018 sp. 6÷9 µm

CHARACTERISTICS: base plate for connecting profile 41x21, 41x41 e 41x61(wall, ceiling and floor). Equipped with 6 holes for greater flexibility of the dowels. Allows a versatility of orientation of the profile. It requires 2 quick nuts Oter Bull.
USE: it allows connecting profiles 41x21, 41x41 and 41x61 to the base material (floor, wall or ceiling). It requires two Oter Bull quick nuts and up to 6 fasteners for greater strength.

CODICE	A [mm]	B [mm]	C [mm]	d_1 [mm]	d_2 [mm]	s [mm]	F (kg)	€ Each
12710	120	120	109	30	13	4	500	**41,67**

Oteraccordi S.p.A. reserves the right to change the information contained in this catalogue without notice.

127-03

09SIPES

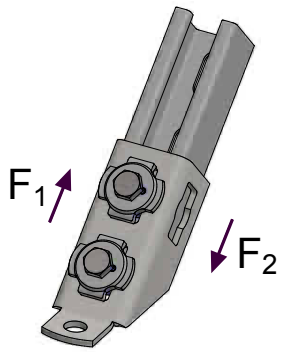

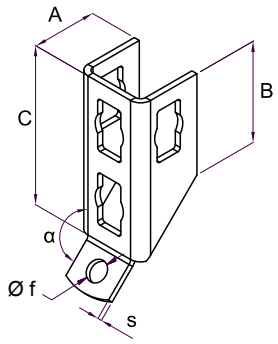

135° BASE PROFILE

- Material: S 235 JR EN 10025
- Electrolytic galvanisation UNI ISO 2081 : 2018 sp. 6÷9 µm

CHARACTERISTICS: base plate to allow 135 ° connection of any profile. Equipped with 4 holes, it allows a versatility of orientation of the profile.
USE: allows to connect a profile to the base material (wall/floor/ceiling). It is used to make the wall reinforcement for brackets subject to a high load or support struts to structures. It is fixed to the profile with one or two Oter Bull quick nuts and a dowel.

CODICE	A [mm]	B [mm]	C [mm]	s [mm]	Ø f [mm]	α	F_1 [kg]	F_2 [kg]	€ Each
12720	45	70	110	4	14	135°	500	300	**24,93**

140-01

09SIPES

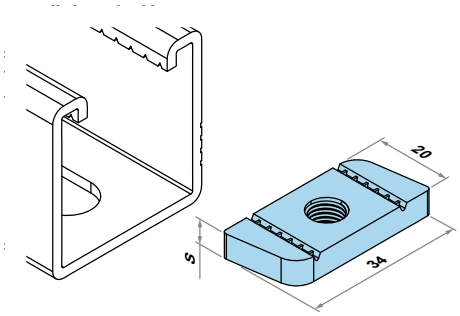

PASSERBY HEAVY NUT

- Material: S 235 JR EN 10025
- Electrolytic galvanisation UNI ISO 2081 : 2018 sp. 6÷9 µm

CHARACTERISTICS: The rectangular heavy-duty nut has two knurled lateral grooves for a quick and safe attachment to the bent fins of the profiles belonging to the series of heavy bracketing. It has a threaded central hole (female) for screwing threaded bars M8, M10 and M12 art. 855-Z.
USE: it is used to make connections between profiles/shelves and threaded rods to fix collars. It is applied in the throat of heavy profiles by exerting a simple rotation of 45°. The particular configuration of the head with double groove allows greater speed of application. It can also be used to make slopes. It must be used together with a threaded bar/ socket and a hexagonal nut.

CODICE	Ø	mm	S [mm]				€ Each
14000	M8	41x21/41/61/82	6	270	100	10/100	**1,42**
14005	M10	41x21/41/61/82	8	350	180	10/100	**1,56**
14010	M12	41x21/41/61/82	10	450	200	10/100	**2,36**

Oteraccordi S.p.A. reserves the right to change the information contained in this catalogue without notice.

140-02

09SIPES

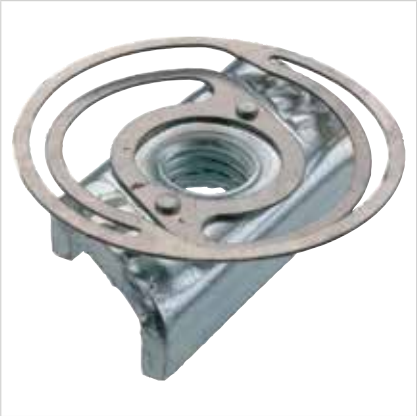

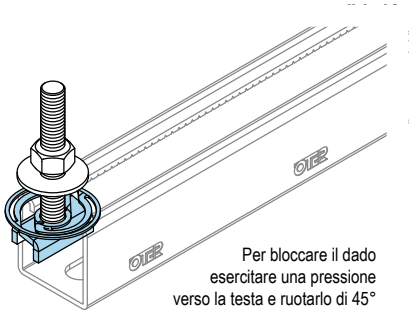

Rapid heavy nut

- Material: S235JR EN 10025
- electrolytic galvanizing UNI ISO 2081:2018 sp. 6 ÷ 9 [µm]

CHARACTERISTICS: the heavy quick nut is made of flexible steel helix and a section C plate. It has a metric thread M8, M10 and M12 (female) to accommodate threaded rods M8, M10 and M12 art. 855z. The heavy self-locking plate is installed on the profiles / brackets belonging to the heavy clamping system.The heavy quick nut is made from a special patented system that allows the locking of the element by macking a simple pressure and 45 ° rotation.By making a light pressure on the rapid nut you can move it left or right by sliding it.
USE: it s used to make connections between the profiles and the threaded rods to fix the clamps. It quickly applies in the groove of the profiles. To block any sliding of the nut due to the weight of the pipe exercised, simply place a washer art. 149-07 over the heavy quick nut.It is the fastest connection system in heavy clamping range.

CODICE	Ø	mm				€ Each
14015	M8	41x21/41/61/82	250	80	10/100	**6,60**
14020	M10	41x21/41/61/82	310	100	10/100	**6,82**
14025	M12	41x21/41/61/82	450	120	10/100	**7,21**

140-03

09SIPES

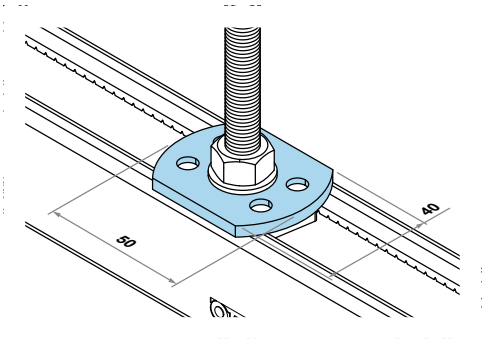

Plate

- Material: S 235 JR EN 10025
- Electrolytic galvanisation UNI ISO 2081 : 2018 sp. 6÷9 µm

CHARACTERISTICS: the plate has a rectangular shape. It is applied on the throat of the profile and belonging to the heavy bracketing series.
USE: The plate has a central circular hole of 13 mm to allow the passage of a threaded bar M6, M8, M10 and M12. It must be used with a hexagonal nut to lock the threaded bar.

CODICE	Ø	mm	mm		€ Each
14030	13	41x21/41/61/82	4	10	**4,40**

Oteraccordi S.p.A. reserves the right to change the information contained in this catalogue without notice.

140-04

09SIPES

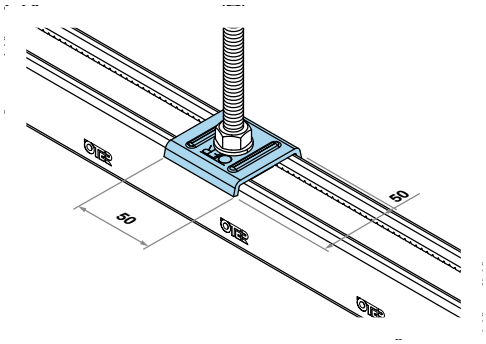

Clip

- Material: S235JR EN 10025
- electrolytic galvanizing UNI ISO 2081:2018 sp. 6 ÷ 9 [µm]

CHARACTERISTICS: it is a plate with two folded edges (Section U) which is applied on the groove of a profile belonging to the heavy fixture range
USE: The plate has a central circular hole Ø 9 mm to allow the passage of a threaded rod M6, M8. It must be used with a hexagonal nut for locking the screwing of the threaded bar.

CODICE	Ø	mm	mm		€ Each
14035	9	41x21/41/61/82	3	10	3,57
14040	11	41x21/41/61/82	3	10	3,57
14045	13	41x21/41/61/82	3	10	3,57

140-05

09SIPES

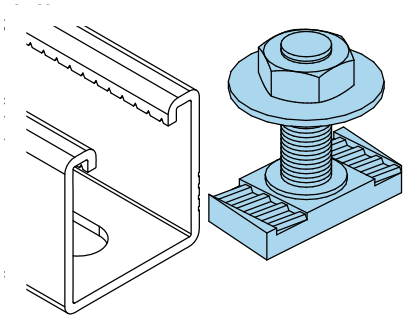

Hammer's screw with nut and washer

- Material: S235JR EN 10025
- electrolytic galvanizing UNI ISO 2081:2018 sp. 6 ÷ 9 [µm]

CHARACTERISTICS: the heavy hammer screw is composed of a nut with a thread M8, M10 and M12 of various lengths, of a washer and a hexagonal nut. The two lateral grooves of the nut ensure a quick and fast coupling to the profiles of the heavy fixture .
USE: it is used to make connections between profiles / brackets and components or to fix the clamps to the pipes. It applies in the groove of heavy profiles by making a simple rotation of 45 ° and locks with the washer and the hexagon nut in the kit. The particular configuration of the head with dual groove enables a faster connection speed and application

CODICE	MxL	mm				€ Each
14050	M8x30	41x21/41/61/82	300	170	5/100	2,84
14055	M8x40	41x21/41/61/82	300	170	5/100	3,04
14060	M8x60	41x21/41/61/82	300	170	5/100	3,26
14065	M10x30	41x21/41/61/82	380	195	5/100	3,14
14070	M10x40	41x21/41/61/82	380	195	5/100	3,35
14075	M10x60	41x21/41/61/82	380	195	5/100	3,79
14080	M12x30	41x21/41/61/82	500	220	5/100	6,19

Oteraccordi S.p.A. reserves the right to change the information contained in this catalogue without notice.

141-01

09SIPES

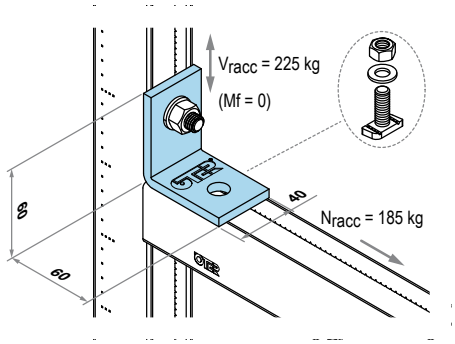

Angle 90° connection with 2 holes

- Material: S235JR EN 10025
- electrolytic galvanizing UNI ISO 2081:2018 sp. 6 ÷ 9 [µm]

CHARACTERISTICS: 90 ° angle plate with two holes for the passage of the screw to hammer Art. 140-05 and belonging to the heavy clamping range.
USE: The angular plate allows to connect two profiles or two profiled sections at a 90° angle without the use of welding for the construction of even articulated and complex structures, for the support of heavy hydro-sanitary or industrial installations. Both profiles have to have the groove towards angle plate.

CODICE	Ø	mm	mm		€ Each
14100	13	41x21/41/61/82	6	50	**4,08**

141-02

09SIPES

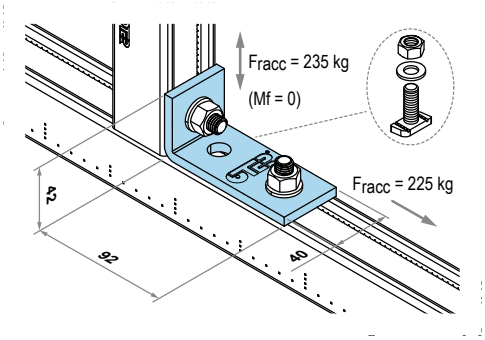

Angle 90° connection with 3 holes

- Material: S235JR EN 10025
- electrolytic galvanizing UNI ISO 2081:2018 sp. 6 ÷ 9 [µm]

CHARACTERISTICS: 90 ° angle plate with three holes for the passage of the screw to hammer Art.140-05 and belonging to the heavy clamping range.
USE: The angular plate allows to connect two profiles or two profiled sections at a 90° angle without the use of welding for the construction of even articulated and complex structures, for the support of heavy hydro-sanitary or industrial installations. The supported load is superior than 2 holes angle plate.Both profiles have to have the groove towards angle plate.

CODICE	Ø	mm	mm		€ Each
14110	13	41x21/41/61/82	6	50	**6,03**

Oteraccordi S.p.A. reserves the right to change the information contained in this catalogue without notice.

141-03

09SIPES

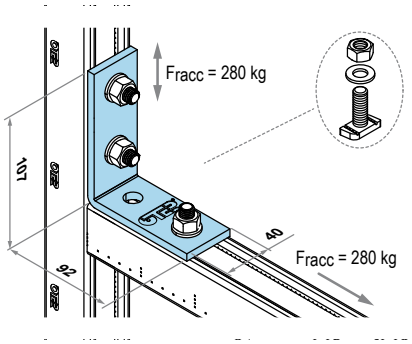

Angle 90° connection with 4 holes

- Material: S235JR EN 10025
- electrolytic galvanizing UNI ISO 2081:2018 sp. 6 ÷ 9 [µm]

CHARACTERISTICS: 90 ° angle plate with four holes for the passage of the screw to hammer Art. 140-05 and belonging to the heavy clamping range.
USE: The angular plate allows to connect two profiles or two profiled sections at a 90° angle without the use of welding for the construction of even articulated and complex structures, for the support of heavy hydro-sanitary or industrial installations.The supported load is superior than 3 holes angle plate. Both profiles have to have the groove towards angle plate.

CODICE	Ø	mm	mm		€ Each
14120	13	41x21/41/61/82	6	10	**6,37**

142-01

09SIPES

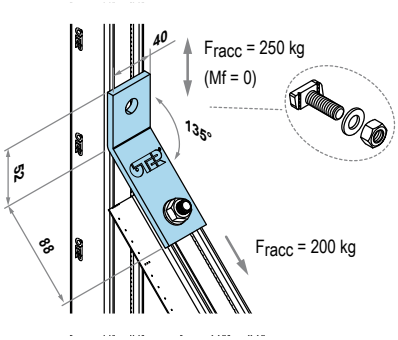

Angle 135° connection with 2 holes

- Material: S235JR EN 10025
- electrolytic galvanizing UNI ISO 2081:2018 sp. 6 ÷ 9 [µm]

CHARACTERISTICS: 135 ° angle plate with two holes for the passage of the screw to hammer Art. 140-05 and belonging to the heavy clamping range.
USE: The angular plate allows to connect two profiles or two profiled sections at a 45° angle without the use of welding. It is often used to create reinforcement brackets for example in the earthquake-resistant structures or structures for supporting pipes subject to thermal expansion or as reinforcement for brackets subject to a high load. Both profiles have to have the groove towards angle plate.

CODICE	Ø	mm	mm		€ Each
14200	13	41x21/41/61/82	6	50	**5,86**

Oteraccordi S.p.A. reserves the right to change the information contained in this catalogue without notice.

143-01

09SIPES

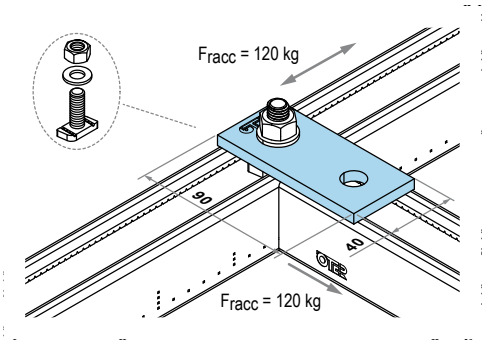

Connection plate with 2 holes

- Material: S235JR EN 10025
- electrolytic galvanizing UNI ISO 2081:2018 sp. 6 ÷ 9 [µm]

CHARACTERISTICS: joining plate with two holes for the passage of the screw to hammer Art. 140-05 and belonging to the heavy clamping range.
USE: the union bracket with two holes allows you to connect two profiles or two profiled sections at 90 °angle without the need for welding. Both profiles must have the groove facing toward the plate.

CODICE	Ø	mm	mm		€ Each
14300	13	41x21/41/61/82	6	50	**4,40**

143-02

09SIPES

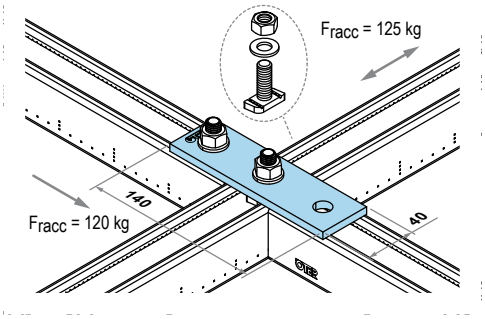

Connection Plate with 3 holes

- Material: S235JR EN 10025
- electrolytic galvanizing UNI ISO 2081:2018 sp. 6 ÷ 9 [µm]

CHARACTERISTICS: joining plate series with three holes for the passage of the screw to hammer Art. 140-05 and belonging to the heavy clamping range
USE: the union plate with three holes allows you to connect two or three sections or two profiled sections in a T or cross without the need for welding. All profiles must have the groove facing toward the plate. "

CODICE	Ø	mm	mm		€ Each
14310	13	41x21/41/61/82	6	50	**5,99**

Oteraccordi S.p.A. reserves the right to change the information contained in this catalogue without notice.

143-03

09SIPES

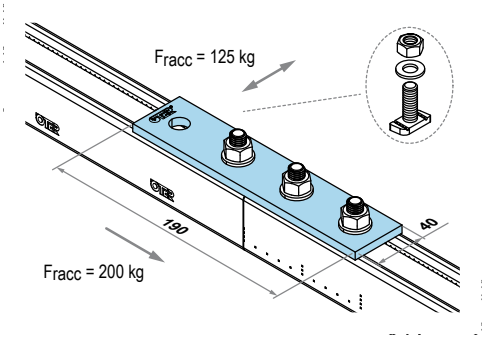

CONNECTION PLATE WITH 4 HOLES

- Material: S235JR EN 10025
- electrolytic galvanizing UNI ISO 2081:2018 sp. 6 ÷ 9 [µm]

CHARACTERISTICS: joining plate with four holes for the passage of the screw to hammer Art. 140-05 and belonging to the heavy clamping range .
USE: the union plate with four holes allows you to connect two profiles or two profiled sections arranged longitudinally (such as an extension) to create a continuity. The two profiles must have the groove facing toward the plate.

CODICE	Ø	mm	mm		€ Each
14320	13	41x21/41/61/82	6	50	**7,41**

143-04

09SIPES

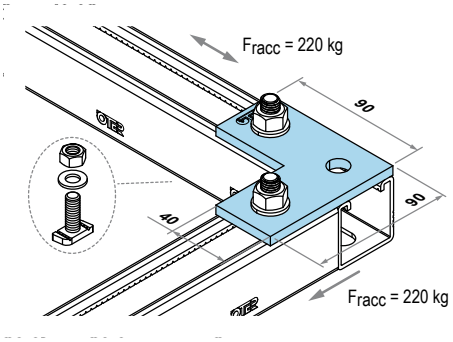

"L" CONNECTION PLATE WITH 3 HOLES

- Material: S235JR EN 10025
- electrolytic galvanizing UNI ISO 2081:2018 sp. 6 ÷ 9 [µm]

CHARACTERISTICS: joining plate with three L holes for the passage of the screw to hammer Art. 140-05 and belonging to the heavy clamping range.
USE: the union plate with three L holes allows you to connect two profiles or two profiled sections at 90 °. The two profiles must have the groove facing toward the plate.

CODICE	Ø	mm	mm		€ Each
14330	13	41x21/41/61/82	6	25	**8,89**

Oteraccordi S.p.A. reserves the right to change the information contained in this catalogue without notice.

143-05

09SIPES

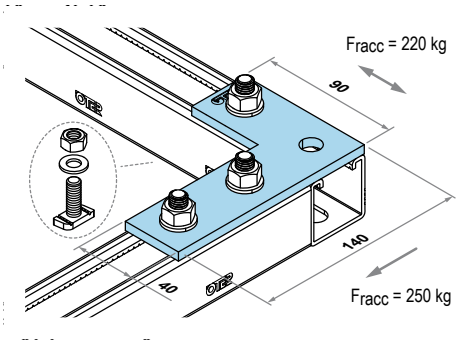

"L" CONNECTION PLATE WITH 4 HOLES

- Material: S235JR EN 10025
- electrolytic galvanizing UNI ISO 2081:2018 sp. 6 ÷ 9 [µm]

CHARACTERISTICS: joining plate with four L holes for the passage of the screw to hammer Art. 140-05 and belonging to the heavy clamping series
USE: the union plate with four L holes allows you to connect two profiles or two profiled sections arranged at 90 °. The two profiles must have the groove facing toward the plate.

CODICE	Ø	mm	mm		€ Each
14340	13	41x21/41/61/82	6	25	12,95

143-06

09SIPES

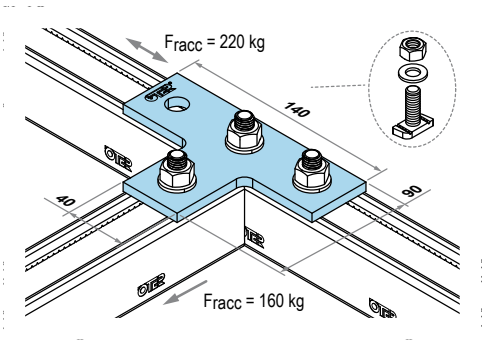

"T" CONNECTION PLATE WITH 4 HOLES

- Material: S235JR EN 10025
- electrolytic galvanizing UNI ISO 2081:2018 sp. 6 ÷ 9 [µm]

CHARACTERISTICS: joining plate with four T holes for the passage of the screw to hammer Art. 140-05 and belonging to the heavy clamping range .
USE: the union plate with four T allows you to connect two profiles or two profiled sections . The two profiles must have groove facing the plate.

CODICE	Ø	mm	mm		€ Each
14350	13	41x21/41/61/82	6	25	12,95

Oteraccordi S.p.A. reserves the right to change the information contained in this catalogue without notice.

143-07

09SIPES

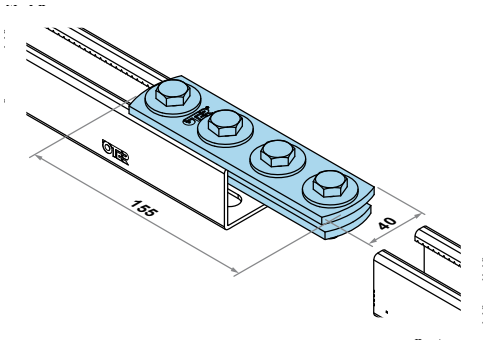

Connection plate

- Material: S235JR EN 10025
- electrolytic galvanizing UNI ISO 2081:2018 sp. 6 ÷ 9 [µm]

CHARACTERISTICS: the union plate is equipped with four hex head screws with washers and it belongs to the heavy fixture range.It consists of two parallel plates that create greater solidity to the component. The bottom must be inserted inside the groove of the two profiles.Half plate (two bolts) must be inserted into a profile and the other half (two bolts) must be entered in the second profile.
USE: it is an extension that allows you to connect two profiles or two profiled sections to create a longitudinal continuity. Both profiles have to have the groove plate facing the union. "

CODICE	mm	mm		€ Each
14360	41x21/41/61/82	5	10	**14,26**

144-01

09SIPES

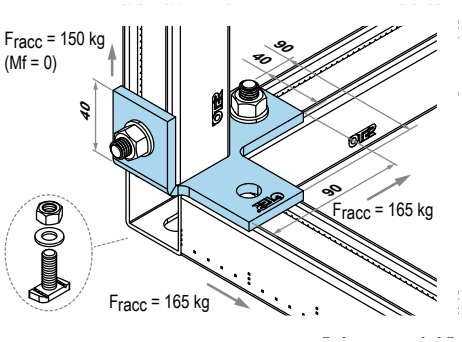

Connection plate with 4 holes "3 Axis"

- Material: S235JR EN 10025
- electrolytic galvanizing UNI ISO 2081:2018 sp. 6 ÷ 9 [µm]

CHARACTERISTICS: joining plate with four holes for the passage of the screw to hammer (Art. 140-05) and belonging to the heavy clamping range.
USE: The union plate with four holes allows you to connect together three profiles or three profiled sections arranged on three distinct axes (xyz). The three profiles have to have the groove facing toward the plate.

CODICE	Ø	mm	mm	NOTE		€ Each
14400	13	41x21/41/61/82	6	DX	25	**12,95**
14410	13	41x21/41/61/82	6	SX	25	**12,95**

Oteraccordi S.p.A. reserves the right to change the information contained in this catalogue without notice.

144-02

09SIPES

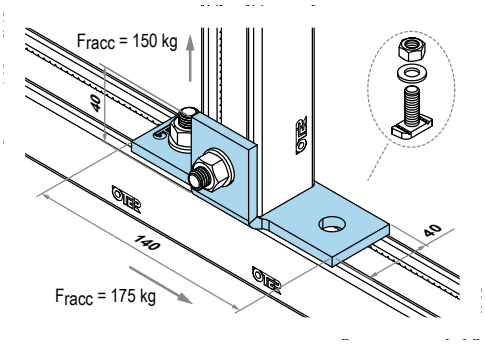

Connection Plate with 4 holes "3 Central Axis"

- Material: S235JR EN 10025
- electrolytic galvanizing UNI ISO 2081:2018 sp. 6 ÷ 9 [µm]

CHARACTERISTICS: joining plate with four holes for the passage of the screw to hammer (Art. 140-05) and belonging to the heavy clamping range.
USE: The union plate with four holes allows you to connect together three profiles or three profiled sections arranged on three distinct axes (xyz). The three profiles have to have the groove facing toward the plate.

CODICE	Ø	mm	mm		€ Each
14420	13	41x21/41/61/82	6	25	**13,24**

144-03

09SIPES

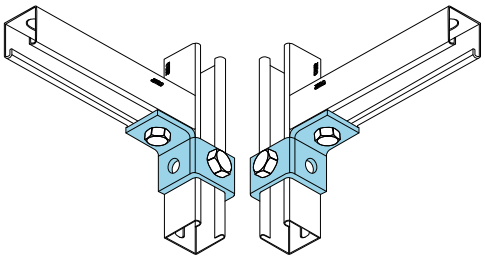

3D Angular with 3 holes

- Material: S 235 JR EN 10025
- Electrolytic galvanisation UNI ISO 2081 : 2018 sp. 6÷9 µm

CHARACTERISTICS: 3D angular plate with three holes for the passage of the hammer screw art. 140-05 and belonging to the heavy bracketing series.
USE: The angular plate allows to connect two profiles or two segments of profile to each other with a 90 ° angle. without using welding for the realization of structures, even articulated and complex, for the support of heavy hydro-sanitary or industrial plants. Both profiles must have the throat facing the corner plate.

CODICE		MxL	mm		€ Each
14430	DX	M10x25	41x21/41/61/82	1	**17,77**
14440	SX	M12x25	41x21/41/61/82	1	**17,77**

Oteraccordi S.p.A. reserves the right to change the information contained in this catalogue without notice.

144-04

09SIPES

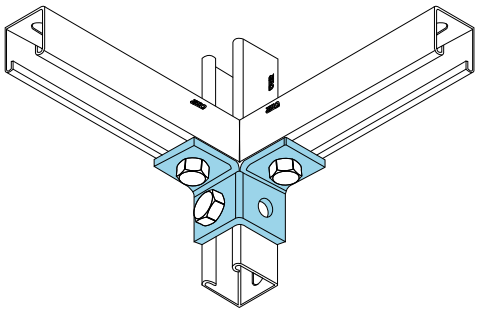

3D Angular with 4 holes

- Material: S 235 JR EN 10025
- Electrolytic galvanisation UNI ISO 2081 : 2018 sp. 6÷9 µm

CHARACTERISTICS: 3D angular plate with four holes for the passage of the hammer screw art. 140-05 and belonging to the heavy bracketing series.
USE: The angular plate allows to connect two profiles or two segments of profile to each other with a 90 ° angle. without using welding for the realization of structures, even articulated and complex, for the support of heavy hydro-sanitary or industrial plants. Both profiles must have the throat facing the corner plate.

CODICE	Ø	mm	mm		€ Each
14450	13,5	41x21/41/61/82	5	1	**29,49**

144-05

09SIPES

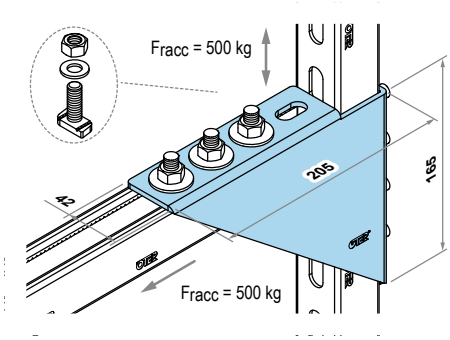

90° Square angle connection open

- Material: S235JR EN 10025
- electrolytic galvanizing UNI ISO 2081:2018 sp. 6 ÷ 9 [µm]

CHARACTERISTICS: the angle plate is provided with 8 holes for the passage of the screw to hammer (Art. 140-05) and belongs to the heavy clamping range.
USE: it is an angular reinforcement for supporting brackets and can be used as longitudinal reinforcement to resist horizontal forces due, for example, to thermal expansion in the pipes. The holes must be addressed on the profiles grooves.

CODICE	mm	mm	holes [mm] / plate		€ Each
14460	41x21/41/61/82	4	13x25	10	**52,98**

Oteraccordi S.p.A. reserves the right to change the information contained in this catalogue without notice.

144-06

09SIPES

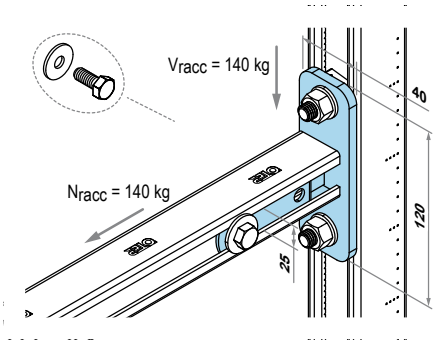

Vertical support

- Material: S235JR EN 10025
- electrolytic galvanizing UNI ISO 2081:2018 sp. 6 ÷ 9 [µm]

CHARACTERISTICS: The vertical support is a plate with two holes for direct wall fixing or on a vertical profile of a length of element belonging to the heavy clamping system. It has two screws with washer and a plate below to be inserted inside the profiled groove. The groove of the profile should be always directed in the direction of the two screws with washer. Then, the section must be with the groove facing to the right or to the left (vertical passage of the installations).
USE: The vertical bracket is used to realize wall or ceiling fixing profiles. It's used to match series41 profiles with 30x15 and 32x20. It 'mostly used for the lateral engagement of the collars / plants . It can be used directly on brick wall.

CODICE	mm	mm	holes [mm] / plate		€ Each
14470	41x21/41/61/82	4	11x20	20	13,37

144-07

09SIPES

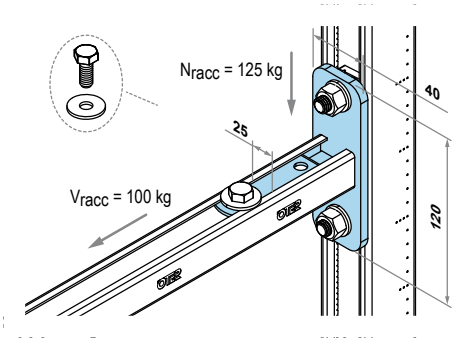

Horizontal support

- Material: S235JR EN 10025
- electrolytic galvanizing UNI ISO 2081:2018 sp. 6 ÷ 9 [µm]

CHARACTERISTICS: The horizontal support is a plate with two holes for direct wall fixing or on a vertical profile belonging to the heavy clamping system. It has two screws with washer and a plate below to be inserted inside the profile groove. The groove of the profile must always point in the direction of the two screws with washer. Then, the profile must be always with the groove facing downwards or towards the other (horizontal passage of the installations).
USE: the horizontal bracket is used to realize wall profile fixing or on a ceiling or on a vertical profile. It can work as a bracket only if a second point of support (reinforcement bracket art. 146-01) is provided.

CODICE	mm	mm	holes [mm] / plate		€ Each
14480	41x21/41/61/82	4	11x20	20	13,37

Oteraccordi S.p.A. reserves the right to change the information contained in this catalogue without notice.

145-01

09SIPES

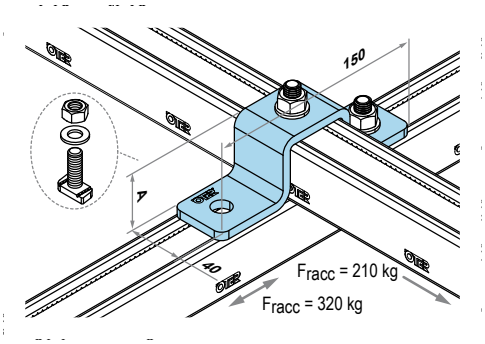

Plate for orthogonal connection

- Material: S235JR EN 10025
- electrolytic galvanizing UNI ISO 2081:2018 sp. 6 ÷ 9 [µm]

CHARACTERISTICS: The orthogonal connection plate is provided with 3 holes and it is suitable for the orthogonal union of two profiles belonging to the heavy clamping range. To be used with hammer screws Art. 140-05.
USE: it is an orthogonal union plate (bridge plate) of two profiles whose groove should be directed towards the plate. "

CODICE	Ø	A [mm]	mm	mm		€ Each
14500	13	21	41x21	5	10	**10,61**
14510	13	41	41x41	5	10	**11,89**
14520	13	61	41x61	5	10	**13,53**
14530	13	82	41x82	5	10	**17,44**

146-01

09SIPES

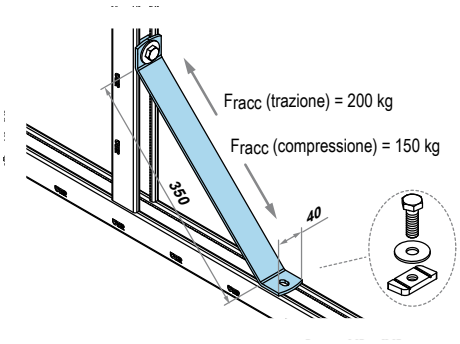

Reinforcing element for bracket

- Material: S235JR EN 10025
- electrolytic galvanizing UNI ISO 2081:2018 sp. 6 ÷ 9 [µm]

CHARACTERISTICS: bracket reinforcement element with two holes 13mm diameter.
USE: The mounting bracket can be used on all sections of the heavy clamping system

CODICE	Length [mm]	mm	mm		€ Each
14600	350	41x21/41/61/82	6	10	**23,63**

Oteraccordi S.p.A. reserves the right to change the information contained in this catalogue without notice.

147-01

09SIPES

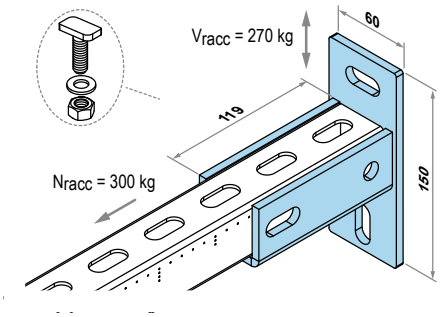

Heavy wall support with horizontal joint

- Material: S235JR EN 10025
- electrolytic galvanizing UNI ISO 2081:2018 sp. 6 ÷ 9 [µm]

CHARACTERISTICS: the horizontal wall support is a plate with two holes for the anchorage to the wall or on a vertical profile . the connection between the support and the profile can take place with two screws hammer art. 140-05.The groove of profile must always point in the direction of both attachment holes.Use the wall support with the groove of the profile always facing downwards or towards the other (horizontal passage of the installations).
USE: the support bracket is used to realize wall profile fixing.It can work as a bracket only if there is a second point of support art. 146-01

CODICE	mm	mm	holes [mm] / plate		€ Each
14700	41x21/41/61/82	4	13x25	5	**27,69**

147-02

09SIPES

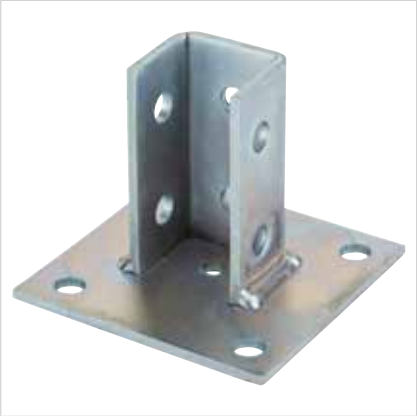

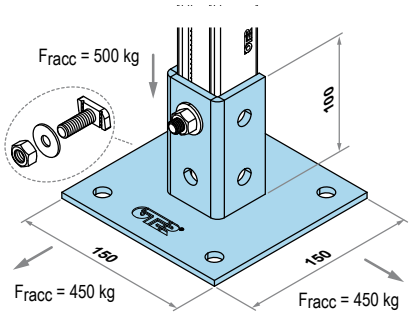

Base support for profile

- Material: S235JR EN 10025
- electrolytic galvanizing UNI ISO 2081:2018 sp. 6 ÷ 9 [µm]

CHARACTERISTICS: The support plate has six holes and is suitable for profiles 41x21, 41x41 and 41x61 belonging to the clamping heavy range and can be installed on a ceiling or wall. The base plate has four equally spaced holes for the housing of anchors, this allows an increased surface area and a better distribution of the stresses acting on anchors. The plate holes is 13 mm.
USE: The base plate can be applied to the wall for fixing heavy profiles or can be applied to the ceiling instead of the threaded bars, when the structure requires a greater stiffness. It can also create brackets by matching a piece of profile after checking the structure.

CODICE	Ø	mm	mm		€ Each
14710	13	41x21/41/61	6	10	**29,93**

Oteraccordi S.p.A. reserves the right to change the information contained in this catalogue without notice.

147-03

09SIPES

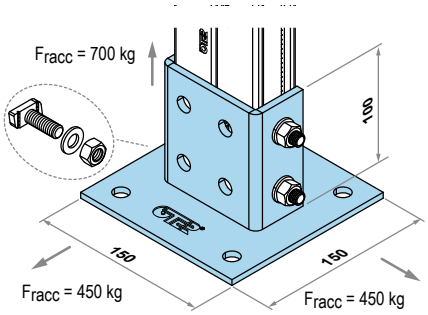

Base support for profile 41X82

- Material: S235JR EN 10025
- electrolytic galvanizing UNI ISO 2081:2018 sp. 6 ÷ 9 [µm]

CHARACTERISTICS: The support plate has eight holes and is suitable for profiles 41x82(double profile belonging to the clamping heavy range) and can be installed on a ceiling or wall. The base plate has four equally spaced holes for the housing of anchors, this allows an increased surface area and a better distribution of the stresses acting on anchors.
USE: The base plate can be applied to the wall for fixing heavy profiles or can be applied to the ceiling instead of the threaded bars, when the structure requires a greater stiffness. It is also possiblerealize brackets by matching a pice of double profile 41x82 , after checking the structure.

CODICE	Ø	mm	mm		€ Each
14720	13	41x82	6	10	**42,08**

148-01

09SIPES

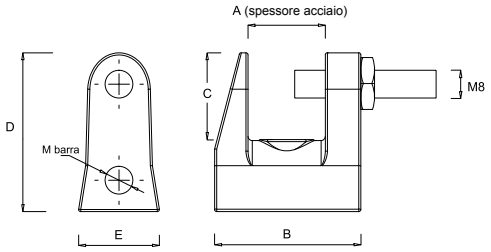

Cast iron clamp

- Malleable galvanized cast iron
- electrolytic galvanizingUNI ISO 2081:2018 sp. 6 ÷ 9 [µm]
- Galvanized steel screw class 8.8
- Galvanized steel nut class 8

CHARACTERISTICS: terminal cast iron for fixing on steel beams without the need of drilling or welding. Supplied with locking nut and bolt.
USE: it's used to fix when the fixing material consists of steel beams. In this way it is possible to achieve clamping systems for the suspension of hydro-sanitary installations, electrical, air conditioning, canalisations. The loading capacities have a safety factor of yield of 4.

CODICE	Ø	A [mm]	B [mm]	C [mm]	D [mm]	E [mm]	Nm			€ Each
14800	M6	3-17	35	20	36	19	8(*)-11(**)	107	100	**19,13**
14810	M8	3-17	35	20	36	19	8(*)-11(**)	107	100	**8,37**
14820	M10	3-19	40	22	43	22	8(*)-22(**)	245	100	**8,64**
14830	M12	3-23	44	28	50	25	8(*)-22(**)	303	50	**15,57**

(*) screw / (**) nut

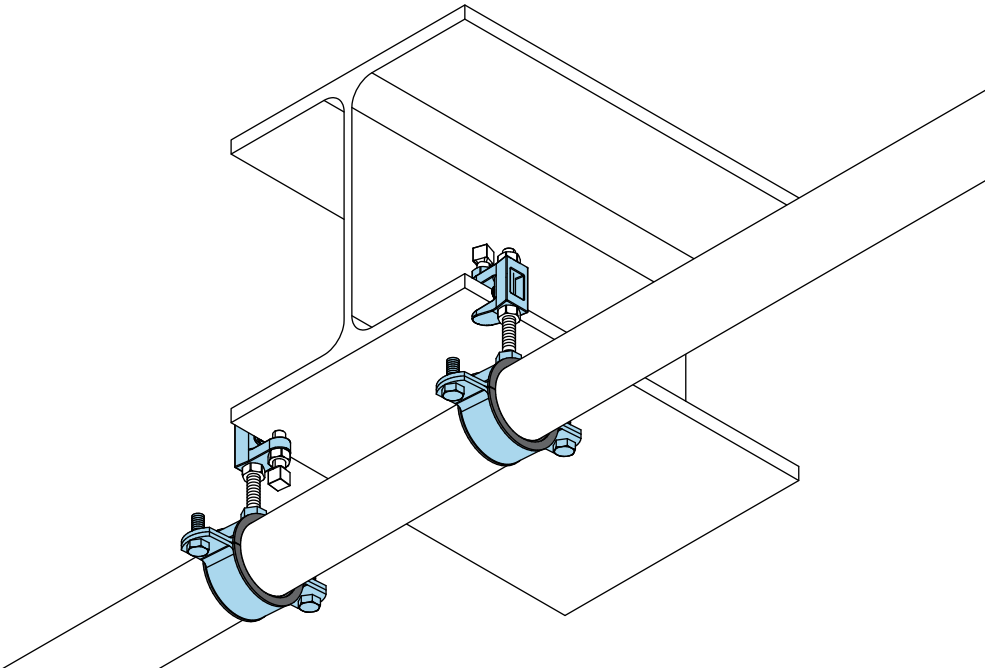

Oteraccordi S.p.A. reserves the right to change the information contained in this catalogue without notice.

148-02

09SIPES

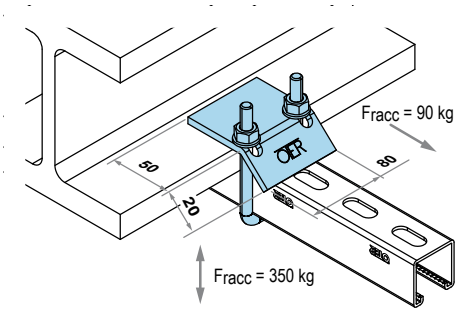

Clamp for rafter

- Material: S235JR EN 10025
- electrolytic galvanizing UNI ISO 2081:2018 sp. 6 ÷ 9 [µm]

CHARACTERISTICS: clamp for securing on steel beams without the need for drilling or welding. It is supplied complete and assembled.
USE: the clamp fits all T-beams but should always be used in pairs. Thanks to the long thread , with a single clamp can be fixed across the range of our profiles of the heavy clamping system.The steel beams thickness must be between 11 and 21 mm.

CODICE	Ø	mm	mm		€ Each
14840	10	41x21/41	6	10	12,79
14850	10	41x61	6	10	15,89
14860	10	41x82	6	10	18,74

148-03

09SIPES

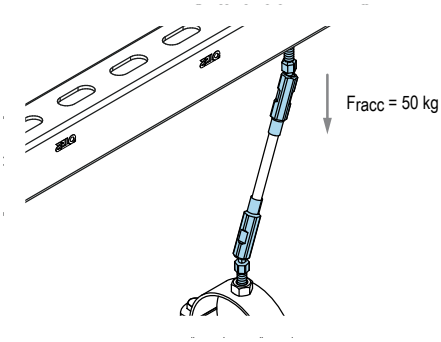

Joint

- Material: S 235 JR EN 10025
- Electrolytic galvanisation UNI ISO 2081 : 2018 sp. 6÷9 µm

USE: joint that integrally connects two or more elements, allowing rotating movements of one against the other.

CODICE	Ø		€ Each
14870	M8	10	19,17
14880	M10	10	20,78

Oteraccordi S.p.A. reserves the right to change the information contained in this catalogue without notice.

149-01

09SIPES

Exagonal socket

- Material:carbon steel class 4.8
- electrolytic galvanizing UNI ISO 2081:2018 sp. 6 ÷ 9 [µm]

CHARACTERISTICS: the socket is a cylinder with internally threaded hexagonal metric.
USE: for threaded rods extensions. The internal length of the thread enables to screw for half the end of a threaded rod and for the other half the ends of the second threaded bar. "

CODICE	Ø	Length [mm]		€ Each
14900	M8	40	10/100	**1,17**
14901	M10	45	10/100	**2,03**
14902	M12	50	10/100	**2,83**

149-02

09SIPES

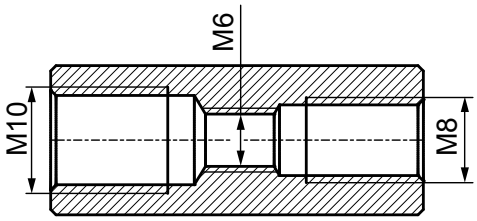

Threaded socket

- Material: carbon steel class 4.8
- electrolytic galvanizing UNI ISO 2081:2018 sp. 6 ÷ 9 [µm]

CHARACTERISTICS: multi threaded socket is a cylinder with circular section, internally threaded with metric thread, with two different diameters of the internal thread.
USE: suitable for all the times in which you want to change the section of a threaded bar from M8 to M10 and vice versa.

CODICE	Length [mm]		€ Each
14903	35	10/100	**8,90**

Oteraccordi S.p.A. reserves the right to change the information contained in this catalogue without notice.

149-03

09SIPES

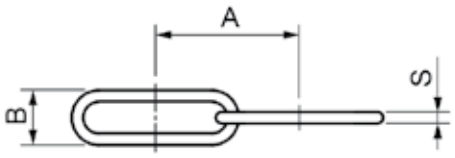

CHAIN

- Material: S235JR EN 10025

CHARACTERISTICS: chain
USE: it is used to create a not rigid suspension.

CODICE	A x B x S [mm]			m
14910	24 x 9,8 x 2,4	68	25 [m]	**3,57**
14911	26 x 12 x 3,0	105	25 [m]	**5,21**

149-04

09SIPES

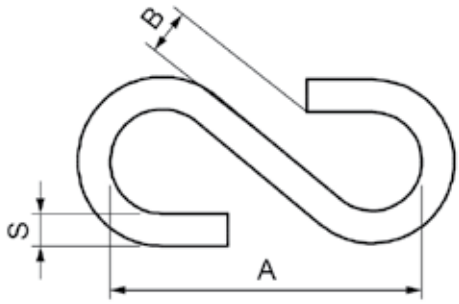

S HOOK

- Material: S235JR EN 10025

CHARACTERISTICS: S hook to be used with the chain.
USE: to produce connections chains between them and to hook any other element. "

CODICE	A x B x S [mm]			€ Each
14912	38 x 5 x 5	80	150	**0,51**

Oteraccordi S.p.A. reserves the right to change the information contained in this catalogue without notice.

149-05

09SIPES

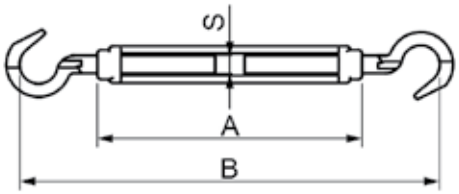

Bowstringer for chain

• Material: S235JR EN 10025

CHARACTERISTICS: the chain tensioner has two hooks at both ends.
USE: it is to tend two chains together or to create a very precise connection even if the same were in pretension. It is mainly used for suspended applications but the connection can also take place with a different angle. "

CODICE	A x B x S [mm]			€ Each
14913	89x130÷180xM6	50	10	**5,86**

149-06

09SIPES

Hexagonal nut

• Cold forged steel
• electrolytic galvanizing UNI ISO 2081:2018 sp. 6 ÷ 9 [µm]

CHARACTERISTICS: Hex nut with metric thread according to ISO 934.
USE: in combination with threaded rods with metric thread.

CODICE	Ø		€ Each
14920	M8	25/100	**0,17**
14921	M10	25/100	**0,22**
14922	M12	25/100	**0,25**

Oteraccordi S.p.A. reserves the right to change the information contained in this catalogue without notice.

149-07

09SIPES

Heavy washer

- Material: S235JR EN 10025
- electrolytic galvanizing UNI ISO 2081:2018 sp. 6 ÷ 9 [µm]

CHARACTERISTICS: slips into a bolt or threaded rod. Suitable for heavy fixture system. Conforms to UNI 6592 and ISO 7089.
USE: it is used to fasten the fixture and is positioned between the head of the screw / hexagon nut and the element to be fixed.

CODICE	Ø	mm	mm	Øi [mm]		€ Each
14930	M8-Ø40	41x21/41/61/82	3	8,5	10/100	**0,65**
14931	M10-Ø40	41x21/41/61/82	3	10,5	10/100	**0,59**
14932	M12-Ø40	41x21/41/61/82	3	12,25	10/100	**0,93**

149-10

09SIPES

Flanged Exagonal screw

- Material: Cold forged steel
- Electro - galvanization: UNI ISO 2081:2018 th. 6 ÷ 9 [µm]

CHARACTERISTICS: Flanged hexagonal screw suitable for light bracketing system.
USE: to connec different components and profiles.

CODICE	MxL	mm		€ Each
14935	M10x25	41x21/41/61/82	10/100	**1,32**
14936	M12x25	41x21/41/61/82	10/100	**1,28**

Oteraccordi S.p.A. reserves the right to change the information contained in this catalogue without notice.

149-08

09SIPES

Plug

• Material: PVC

CHARACTERISTICS: The PVC cap is installed on the end of the profiles. The fixing operation is carried out by simply pressing the cap on the end of the profile.
USE: it is used as security to close the end of profiles to avoid possible cuts or injuries, or to prevent the escape of any wiring or to prevent foreign bodies from entering.

CODICE	mm		€ Each
14940	41x21	10/100	1,32
14941	41x41	10/100	1,34
14942	41x61	10/100	2,35

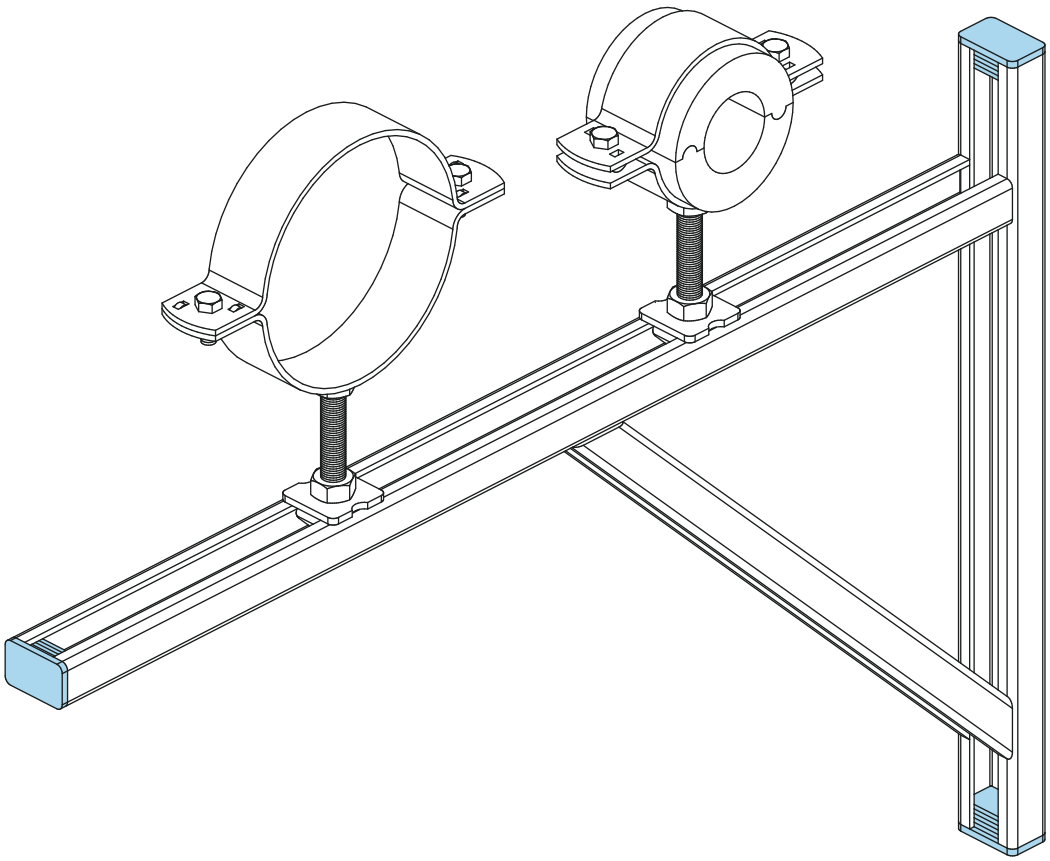

Oteraccordi S.p.A. reserves the right to change the information contained in this catalogue without notice.

149-09

09SIPES

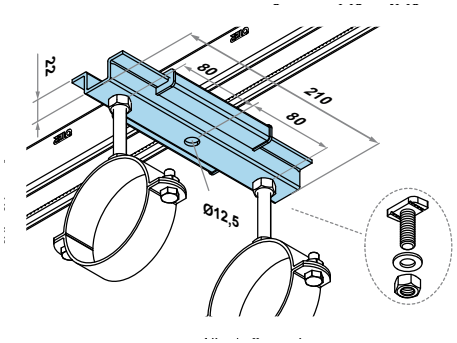

Sliding saddle

- Material: S235JR EN 10025
- Electrolytic galvanizing UNI ISO 2081:2018 th. 6 9 [µm]
- Polyamide sliding rails with glass fibres

CHARACTERISTICS: max slip length 100 mm - temperature resistance from -30 C° to -200 C° - maximum load capacity with floor mounting 130 Kg - maximum load capacity with floor mounting 110 Kg - static friction coefficient µ0 = 0,18 - sliding coefficient of friction: µ0 = 0,14 - thermal conductivity: 0,33 W
USE: for the fixing of pipes with sliding support to compensate the system expansion

CODICE	∅ [mm]		€ Each
14950	12,5	12	22,67

149-11

09SIPES

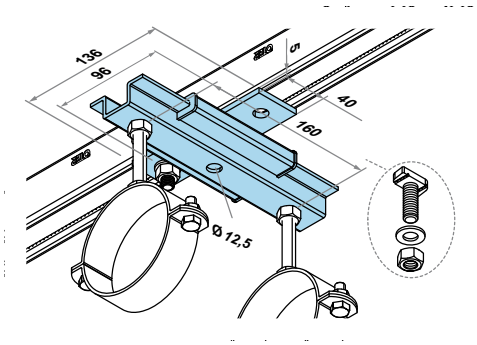

Sliding saddle with welded plate

- Material: S235JR EN 10025
- Electrolytic galvanizing UNI ISO 2081:2018 th. 6 9 [µm]
- Polyamide sliding rails with glass fibres

CHARACTERISTICS: max slip length 90 mm - temperature resistance from -30 C° to -200 C° - maximum load capacity with floor mounting 130 Kg - maximum load capacity with floor mounting 110 Kg - static friction coefficient µ0 = 0,18 - sliding coefficient of friction: µ0 = 0,14 - thermal conductivity: 0,33 W
USE: for the fixing of pipes with sliding support to compensate the system expansion

CODICE	∅ [mm]		€ Each
14960	12,5	12	65,52

Oteraccordi S.p.A. reserves the right to change the information contained in this catalogue without notice.

149-12

09SIPES

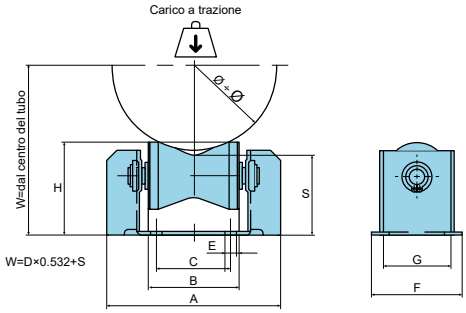

"D" Roller support

- Roller Material: Carbon Steel
- Pin material: AISI 304 stainless steel 2B EN 1.403
- Bearing: Sintered based on PTFE
- Frame material: S235JR EN 10025
- Electrolytic galvanizing UNI ISO 2081:2018 th. 6 9 [µm]
- Resists up to 300 °C

CHARACTERISTICS: Radial coefficient of friction: 0,075.
USE: suitable for high expansion pipe installations.

CODICE	∅÷∅	model	A [mm]	B [mm]	C [mm]	E [mm]	F [mm]	G [mm]	H [mm]	S [mm]			€ Each
14970	50÷100	D 50	105	43	45	7	55	40	55	47	500	1	**106,99**
14971	100÷180	D 100	142	75	60	8	71	54	61	47	1000	1	**229,27**

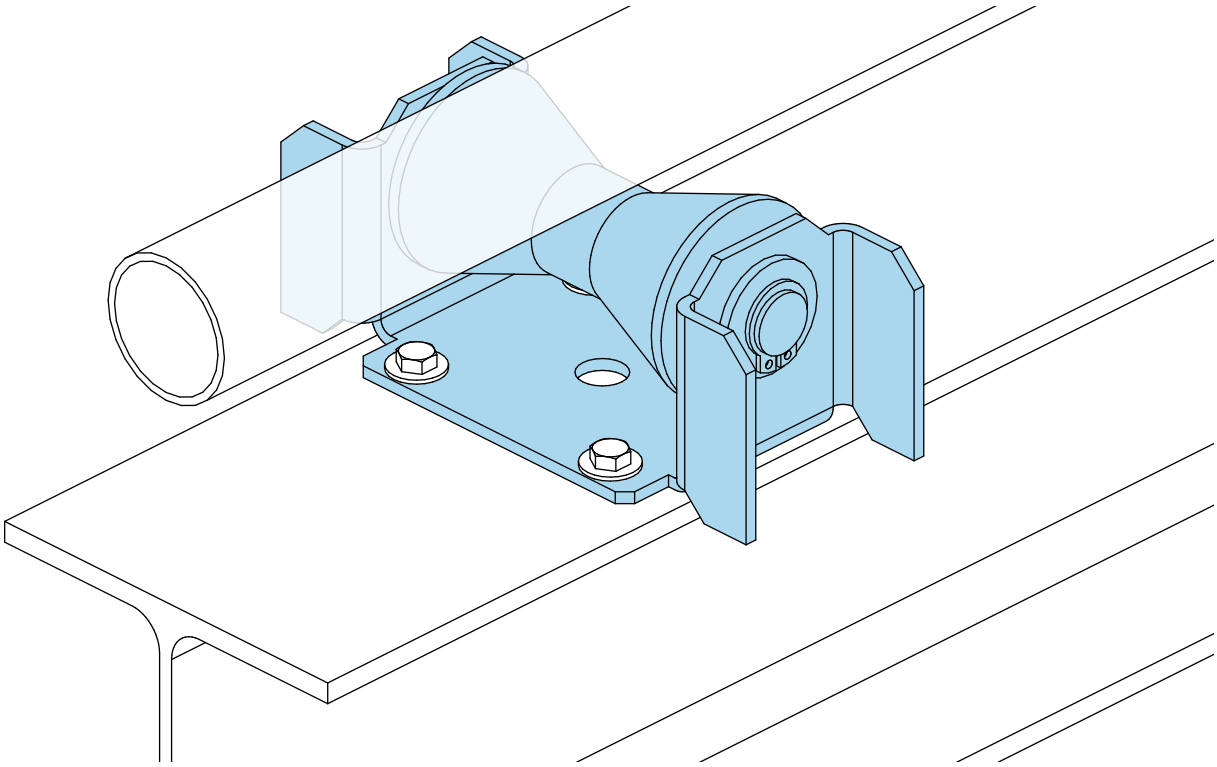

Oteraccordi S.p.A. reserves the right to change the information contained in this catalogue without notice.

149-13

09SIPES

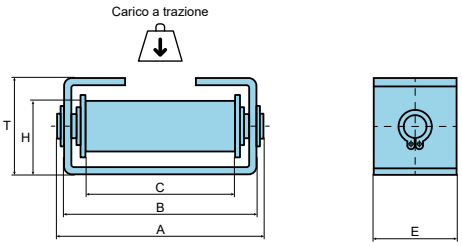

"S" Roller support for insulated pipes

- Roller Material: Carbon Steel
- Pin material: AISI 304 stainless steel 2B EN 1.403
- Bearing: Sintered based on PTFE
- Frame material: S275JR EN 10025
- Electrolytic galvanizing UNI ISO 2081:2018 th. 6 ÷9 [µm]

CHARACTERISTICS: Radial coefficient of friction: 0,05 (S60 and S75) - 0,045 (S100).
USE: suitable for pipe applications **insulated** with high expansion. To be used in conjunction with article 149-14.

CODICE	∅÷∅	model	A [mm]	B [mm]	C [mm]	E [mm]	H [mm]	T [mm]			€ Each
14975	0÷80	S 60	89	82	62	35	30	40	600	1	**129,91**
14976	80÷180	S 75	105	95	65	50	61	77	1000	1	**198,00**
14977	180÷300	S 100	143	135	99	65	76	100	1500	1	**305,70**

Oteraccordi S.p.A. reserves the right to change the information contained in this catalogue without notice.

149-14

09SIPES

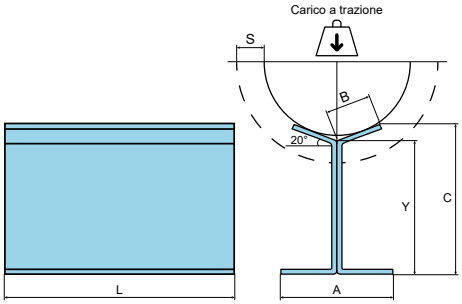

Saddle for "S" support roller for insulated pipes

- Material S275JR EN 10025
- Electrolytic galvanizing UNI ISO 2081:2018 th. 6÷9 [µm]]

USE: suitable for pipe applications insulated with high expansion. To be used in conjunction with article 149-13.

CODICE	∅÷∅	model	A [mm]	B [mm]	C [mm]	L [mm]	S [mm]	Y [mm]		Model (*)		€ Each
14980	0÷80	SL 10	60	25	80	200	40	69	600	S 60	1	**55,94**
14981	80÷180	SL 20	60	35	95	300	60	81	1000	S 95	1	**84,70**
14982	180÷300	SL 30	92	60	125	300	80	101	1500	S 100	1	**147,02**

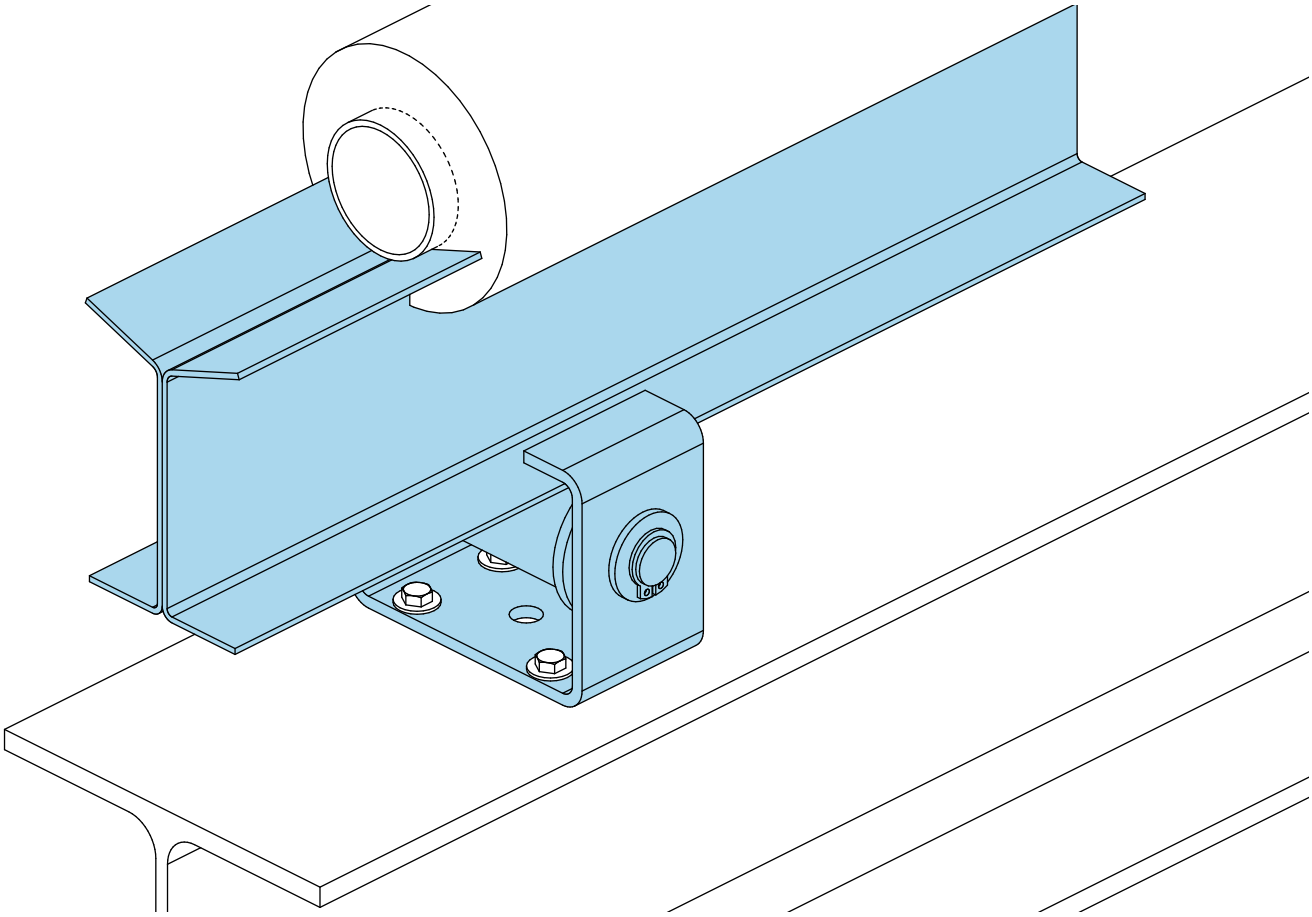

Oteraccordi S.p.A. reserves the right to change the information contained in this catalogue without notice.

TECHNICAL SPECIFICATIONS PROFILES

		41x21	41x41	41x61	41x82
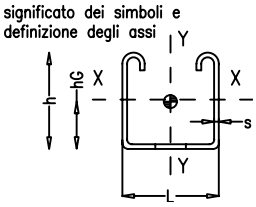		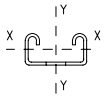	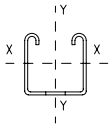	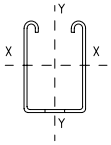	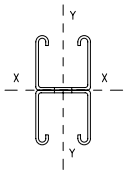
Name		130-01	130-02	130-03	130-04
Thick profile	s [mm]	2,5	2,5	2,5	2,5
Height profile	h [mm]	21	41	61	82
Widht profile	L [mm]	41	41	41	41
Area of the cross section	mm^2	204,00	304,00	404,00	608,00
Lenght of the rod	m	3,00/6,00	3,00/6,00	3,00/6,00	3,00/6,00
Materials					
Allowable stress	δ_{amm} [N/mm²]	235	235	235	235
Additional safety coefficient		0,85	0,85	0,85	0,85
Surface treatment					
not provided (stainless steel)		yes	yes	yes	yes
X-X Axis features					
Distanze center of gravity from the bottom profile	h_G [mm]	9,85	20,81	31,11	41
Moment of inertia X axis Ix	I_x [mm⁴]	10712	61704	173494	350584
Flexural modulus (fiber stretched on the bottom)	Wyf [mm³]	1087,5	2965,1	5576,8	8550,8
Flexural modulus (fiber stretched open side)	Wya [mm³]	960,7	3056,2	5804,4	8550,8
Radius of gyration	i_x[mm]	7,2	14,2	20,7	24,0
Allowable moment	M_x [Nm]	191,9	610,5	1159,4	1708,0
X-Y Axis features					
Moment of inertia Y axis	I_y [mm⁴]	54586	91964	128803	183389
Flexural modulus	W_x [mm³]	2662,7	4486,0	6283,1	8945,8
adius og gyration	i_x[mm]	16,4	17,4	17,9	17,4
Allowable moment	M_x [Nm]	531,9	896,1	1255,0	1786,9

note

STAINLESS STEEL AISI (A2)

LIGHT BRACKETING

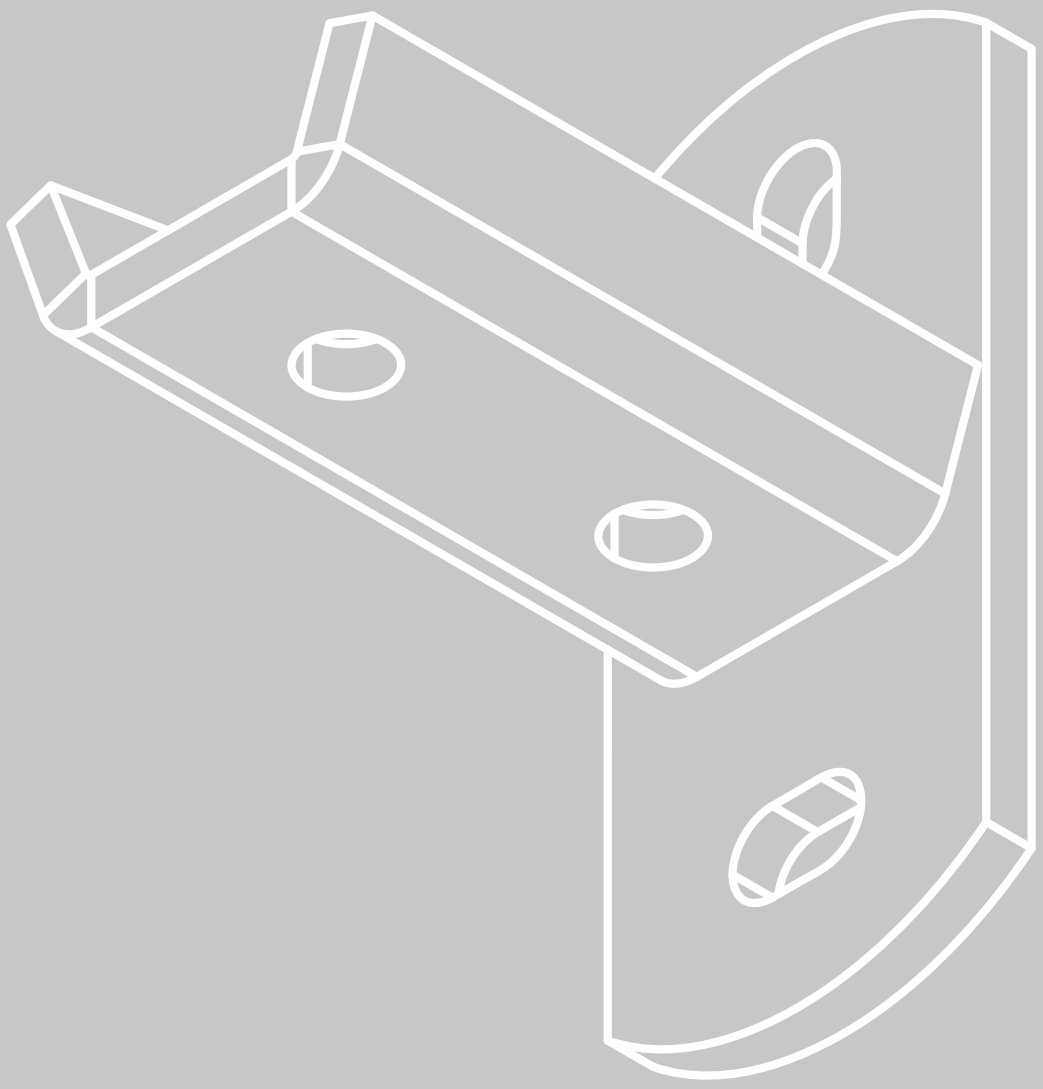

OTER FIX

160-01

09SINOX

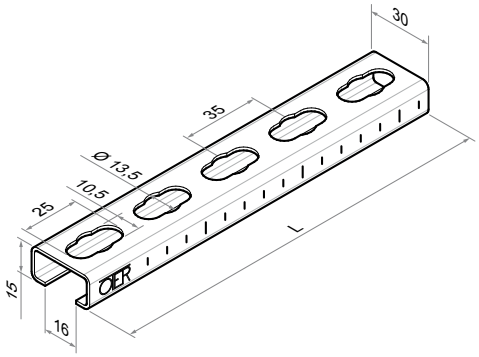

PROFILE: 30x15

• Material: Stainless steel AISI 304 EN 10088

CHARACTERISTICS: It belongs to the light fixings range.Thickness is1.5 mm and the rods are 2.00 m long.It can be used with all accessories and components belonging to the light fixing.
On one side there are some marks that help to cut the lenght .On the other side of profile there are big holes that allow several installation.
USE: to realize structures for civil installations (cabling support , electrical systems, canalization and ventilation) and for small and medium size installations.

CODICE	mm	L [m]	[pz]	€ Each
16000	1,5	2	10	**88,61**
16010	1,5	2	50	**83,95**

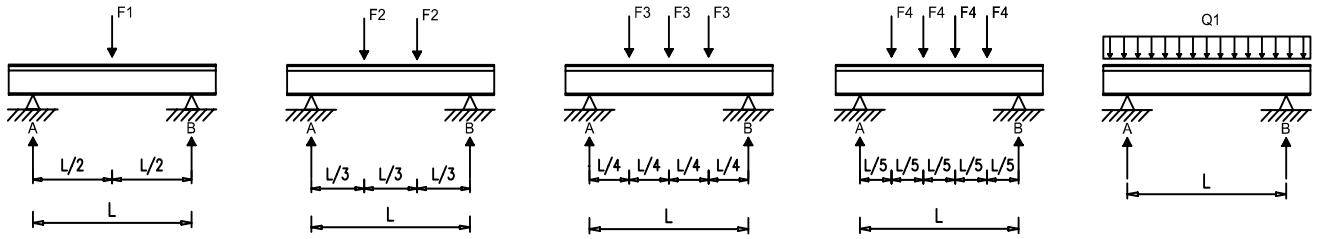

	L = 500 [mm]	L = 1000 [mm]	L = 1500 [mm]	L = 2000 [mm]
F1 [kg]	43,2	17,3	7,7	4,3
F2 [kg]	32,4	10,9	4,9	2,7
F3 [kg]	21,6	8,1	3,6	2,0
F4 [kg]	18,0	6,5	2,9	1,6
Q1 [kg/m]	86,4	27,6	8,2	3,5

Condizioni di carico:

- Sollecitazione nel materiale inferiore all'85% dello snervamento;
- Oppure freccia massima di 1/200 (intesa come deformazione locale diviso lunghezza).

Oteraccordi S.p.A. reserves the right to change the information contained in this catalogue without notice.

160-02

09SINOX

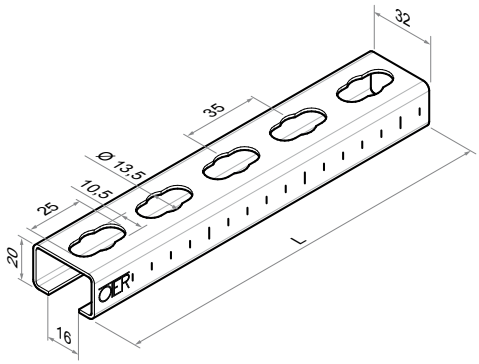

PROFILE: 32x20

• Material: Stainless steel AISI 304 EN 10088

CHARACTERISTICS: It belongs to the light fixings range.Thickness is 2.5 mm and the rods are 2.00 m long.It can be used with all accessories and components belonging to the light fixing.
On one side there are some marks that help to cut the lenght .On the other side of profile there are big holes that allow several installation.
USE: to realize structures for civil installations (cabling support , electrical systems, canalization and ventilation) and for small and medium size installations.

CODICE	mm	L [m]	[pz]	€ Each
16020	2,5	2	10	138,37
16030	2,5	2	50	132,15

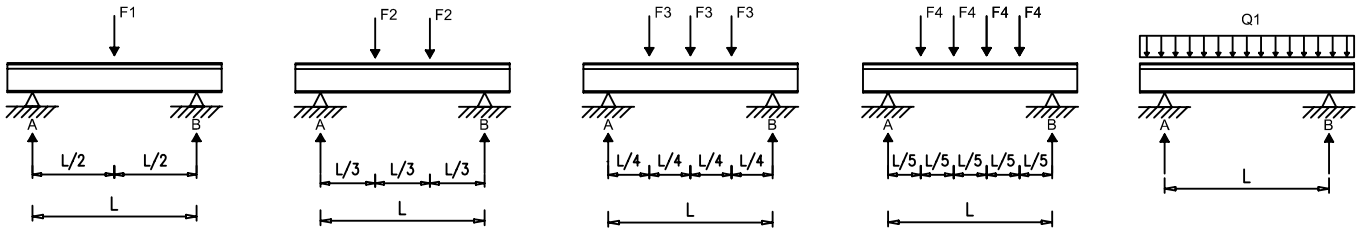

	L = 500 [mm]	L = 1000 [mm]	L = 1500 [mm]	L = 2000 [mm]
F1 [kg]	72,0	36,0	17,9	10,1
F2 [kg]	54,0	25,5	11,3	6,4
F3 [kg]	36,0	19,0	8,4	4,7
F4 [kg]	30,0	15,0	6,7	3,8
Q1 [kg/m]	144,0	64,5	19,1	8,1

Condizioni di carico:
- Sollecitazione nel materiale inferiore all'85% dello snervamento;
- Oppure freccia massima di 1/200 (intesa come deformazione locale diviso lunghezza).

Oteraccordi S.p.A. reserves the right to change the information contained in this catalogue without notice.

160-03

09SINOX

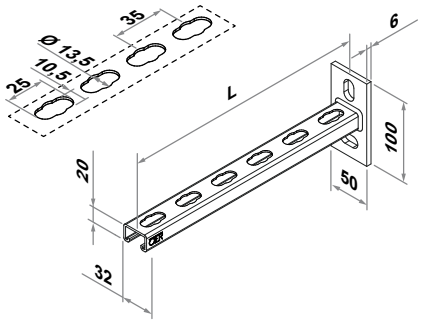

SUPPORT BRACKET 32x20

• Material: Stainless steel AISI 304 EN 10088

CHARACTERISTICS: Support bracket with section C. The fixing plate has holes to allow greater flexibility for the attachment to the base material (wall, ceiling, floor) both horizontally and vertically, through the use of anchors. On one side there is a graduated scale for easier cutting to size at the construction site. The welding (along the perimeter) of the 32x20 profile to the plate ensures an excellent strenght to the work loads.
USE: the bracket allows to realize the ideal support for electrical installations, pipeline and air conditioning systems.

CODICE	L [mm]		€ Each
16040	250	5	73,85

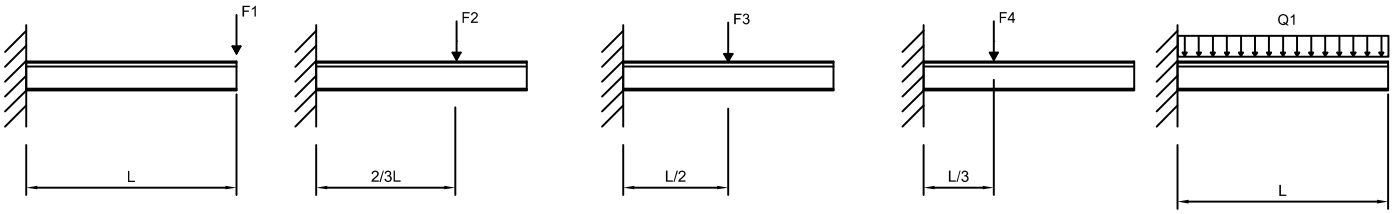

	L = 250 [mm]
F1 [kg]	45,6
F2 [kg]	68,4
F3 [kg]	91,2
F4 [kg]	136,8
Q1 [kg/m]	182,4

Condizioni di carico:

- Sollecitazione nel materiale inferiore all'85% dello snervamento;
- Oppure freccia massima di 1/200 (intesa come deformazione locale diviso lunghezza);
- La verifica del carico ammissibile è subordinata alla capacità di portata degli ancoranti (a cura dell'applicatore).

Oteraccordi S.p.A. reserves the right to change the information contained in this catalogue without notice.

160-04

09SINOX

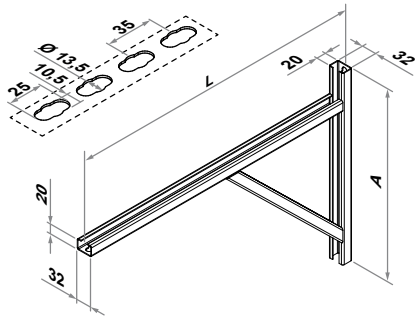

Welded bracket 32x20

• Material: Stainless steel AISI 304 EN 10088

CHARACTERISTICS: Support bracket with section C. The fixing plate has holes to allow greater flexibility for the attachment to the base material (wall, ceiling, floor) both horizontally and vertically, through the use of anchors. On one side there is a graduated scale for easier cutting to size at the construction site. The welding (along the perimeter) of the 32x20 profile to the plate ensures an excellent strenght to the work loads.
USE: the bracket allows to realize the ideal support for electrical installations, pipeline and air conditioning systems.

CODICE	A [mm]	L [mm]	C		€ Each
16050	300	370	1	2	**105,71**

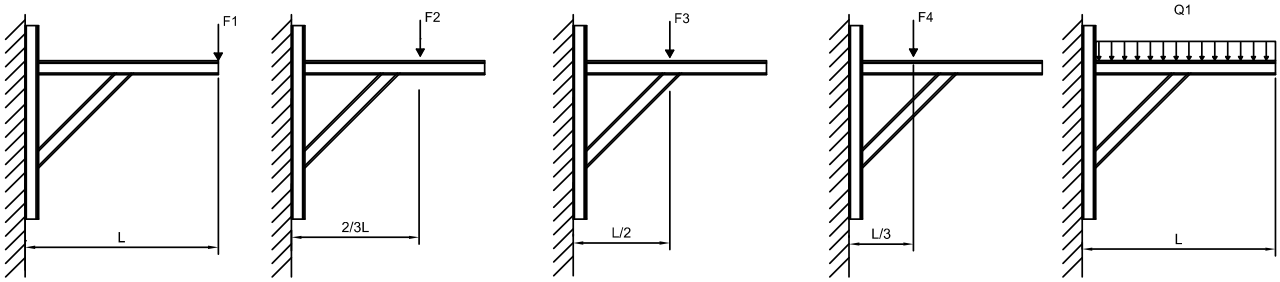

	L = 370 [mm]
F1 [kg]	74,4
F2 [kg]	148,9
F3 [kg]	99,2
F4 [kg]	111,6
Q1 [kg/m]	402,3

Condizioni di carico:

- Sollecitazione nel materiale inferiore all'85% dello snervamento;
- Oppure freccia massima di 1/200 (intesa come deformazione locale diviso lunghezza);
- La verifica del carico ammissibile è subordinata alla capacità di portata degli ancoranti (a cura dell'applicatore).

Oteraccordi S.p.A. reserves the right to change the information contained in this catalogue without notice.

161-01

09SINOX

Hammer screw with nut/washer

• Material: Stainless steel AISI 304 EN 10088

CHARACTERISTICS: the hammer screw is composed of a rectangular nut welded to a threaded bar M10, a hexagonal nut and a washer and it is used with the light fixture series.
USE: it is used to make connections between the various components and sections. It can also be used to make connections to the clamps. It is applied in the profiles, turning the hammer screw to 90 ° and applying the washer and the nut supplied.

CODICE	MxL	mm				€ Each
16090	M8x30	30x15 - 32x20	150	95	10	**4,98**
16100	M10x30	30x15 - 32x20	150	95	10	**6,06**

162-01

09SINOX

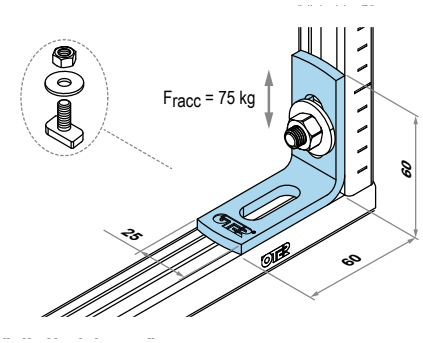

Angle 90° connection with 2 holes

• Material: Stainless steel AISI 304 EN 10088

CHARACTERISTICS: 90 ° angle plate with two holes for the passage of the screw hammer art. 161-01, and belonging to the light fixture series.
USE:the angular plate allows to connect two sections or two profiled sections at an angle to 90 ° without welding, for the realization of even complex and articulated structures, for the support of medium-light installations such as electrical systems, wiring, canalisations and ventilation.

CODICE	mm	mm	holes [mm] / plate		€ Each
16200	30x15 - 32x20	4	10,5x30	10	**9,64**

Oteraccordi S.p.A. reserves the right to change the information contained in this catalogue without notice.

163-01

09SINOX

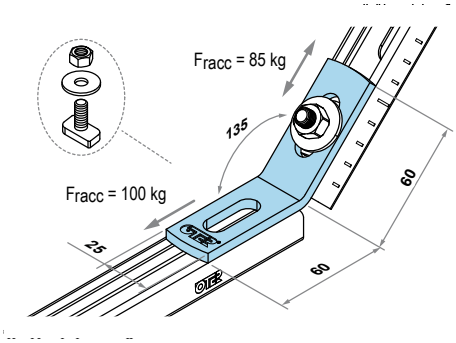

Angle 135° connection with 2 holes

• Material: Stainless steel AISI 304 EN 10088

CHARACTERISTICS: 135 ° angle plate with two holes for the passage of the screw hammer art. 161-01, and belonging to the light fixture series.
USE: lthe angular plate allows to connect two sections or two profiled sections at an angle to 45 ° without welding. It is often used to create reinforcing brackets or as reinforcement for braxkets subject to a high load.

CODICE	mm	mm	holes [mm] / plate		€ Each
16300	30x15 - 32x20	4	10,5x30	10	**9,64**

164-01

09SINOX

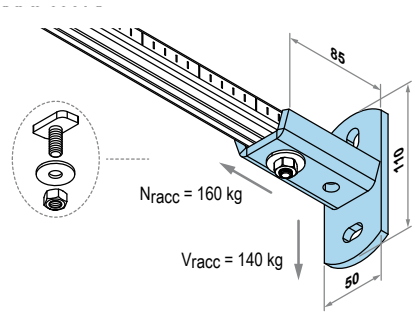

Wall support "HORIZONTAL"

• Material: Stainless steel AISI 304 EN 10088

CHARACTERISTICS: the wall bracket is a plate with two holes to allow greater flexibility of wall anchor of one length of element belonging to the light fixing system.
USE: the support bracket is used to realize wall profile fixings or ceiling. It can work as a bracket only if it is provided a second point of support as a reinforcement bracket . The connection between the wall bracket and the profile can take place with two hammer screws art. 161-01. The throat of the section must always point in the direction of both attachment holes.

CODICE	mm	mm	holes [mm] / plate		€ Each
16400	30x15 - 32x20	4	10,5x16	10	**112,73**

Oteraccordi S.p.A. reserves the right to change the information contained in this catalogue without notice.

169-01

09SINOX

Hexagonal screw

• Material: Stainless steel AISI 304 EN 10088

CHARACTERISTICS: the collar screw has a hexagonal head and the bar is M8 and M10 diameter . It 's suitable for the light fixing system.
USE: it is used to realize connections between the various components and sections.

CODICE	MxL	mm		€ Each
16900	M8x20	30x15 - 32x20	10	1,64
16910	M10x25	41x21/41/61/82	10	2,47

169-02

09SINOX

Washer

• Material: Stainless steel AISI 304 EN 10088

CHARACTERISTICS: in conformity with UNI 6592 and ISO 7089. And it's suitable for heavy fixing system.
USE: It goes in a bolt or in a threaded bar.

CODICE	Ø	mm	mm		€ Each
16920	M8 -Ø30	30x15 - 32x20	2	10	0,42
16930	M10 -Ø30	30x15 - 32x20	2	10	0,62

Oteraccordi S.p.A. reserves the right to change the information contained in this catalogue without notice.

TECHNICAL SPECIFICATIONS PROFILES

		30x15	32x20
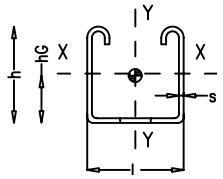		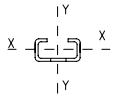	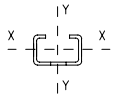
Name		160-01	160-02
Thick profile	s [mm]	1,5	2,5
Height profile	h [mm]	15	20
Widht profile	L [mm]	30	32
Area of the cross section	mm^2	97,50	175,00
Lenght of the rod	m	2,00	2,50
Materials		A2-70	A2-70
Allowable stress	δ_{amm} [N/mm^2]	225	225
Additional safety coefficient		0,9	0,9
Surface treatment			
not provided (stainless steel)		sì	sì
X-X Axis features			
Distanze center of gravity from the bottom profile	h_G [mm]	6,54	8,21
Moment of inertia X axis Ix	I_x [mm^4]	2759	7458
Flexural modulus (fiber stretched on the bottom)	Wyf [mm^3]	421,9	908,4
Flexural modulus (fiber stretched open side)	Wya [mm^3]	326,1	632,6
Radius of gyration	i_x[mm]	5,3	6,5
Allowable moment	M_x [Nm]	66,0	128,1
X-Y Axis features			
Moment of inertia Y axis	I_y [mm^4]	13985	28952
Flexural modulus	W_x [mm^3]	932,3	1809,5
Radius og gyration	i_x[mm]	12,0	12,9
Allowable moment	M_x [Nm]	188,8	366,4

note

note

STAINLESS STEEL AISI (A2)

HEAVY BRACKETING

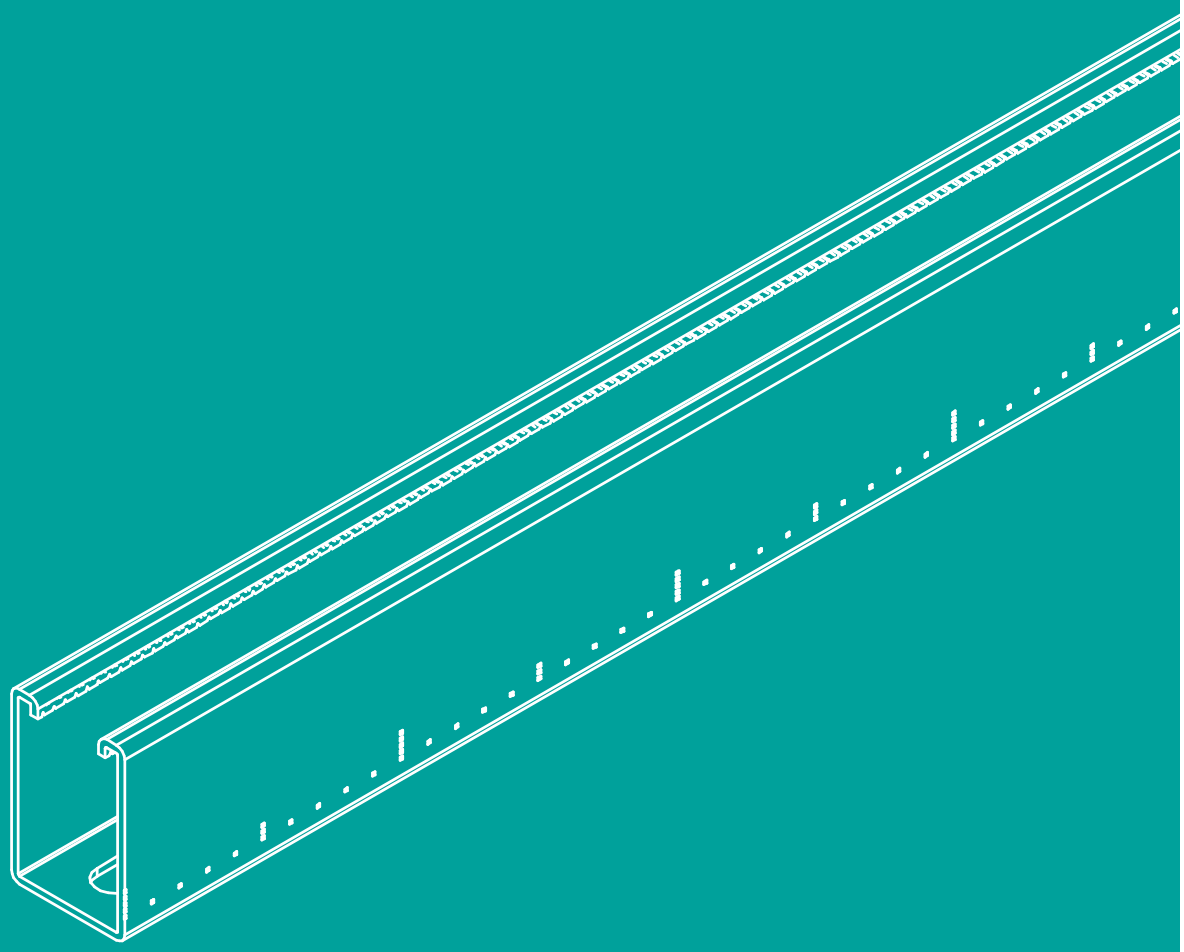

OTER FIX

170-01

09SPIX4

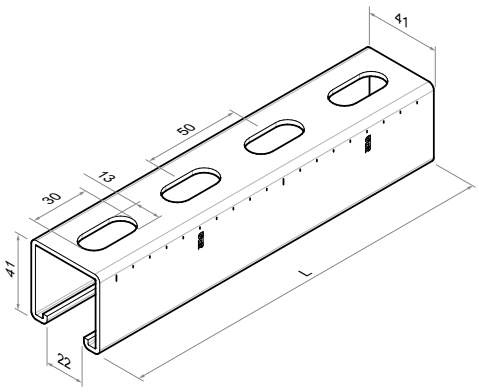

PROFILE: 41x41

• Material:Stainless steel AISI 304 EN 10088

CHARACTERISTICS: It belongs to the heavy fixing range.Thickness is 2,5 mm and the rods are 3.00 m and 6,00 m long.It can be used with all accessories and components belonging to the heavy fixing.
On one side there are some marks that help to cut the lenght .On the other side of profile there are big holes that allow several installation.
USE: to realize structures for civil installations (water installation,cabling support , electrical systems, canalization and ventilation) and for industrial and medium size installations.
Ideal for the construction of high capacity structures.

CODICE	mm	L [m]	[pz]	€ Each
17000	2,5	3	10	357,57

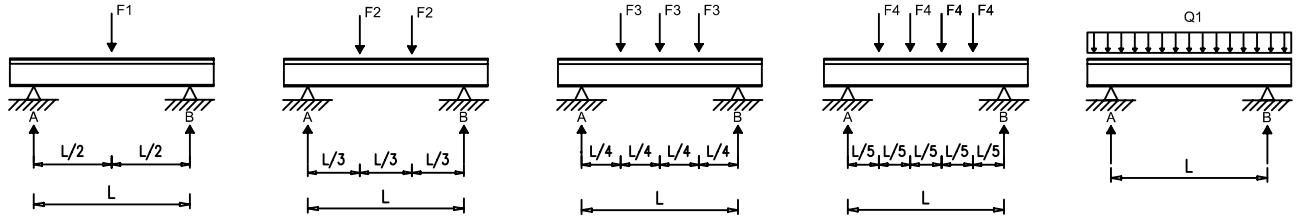

	L = 500 [mm]	L = 1000 [mm]	L = 1500 [mm]	L = 2000 [mm]	L = 2500 [mm]	L = 3000 [mm]
F1 [kg]	280,0	140,0	89,6	50,4	32,3	22,4
F2 [kg]	210,0	105,0	56,7	31,9	20,4	14,2
F3 [kg]	140,0	94,9	42,2	23,7	15,2	10,5
F4 [kg]	116,7	58,3	33,7	18,9	12,1	8,4
Q1 [kg/m]	560,0	280,0	95,6	40,3	20,6	11,9

Condizioni di carico:
- Sollecitazione nel materiale inferiore all'85% dello snervamento;
- Oppure freccia massima di 1/200 (intesa come deformazione locale diviso lunghezza).

Oteraccordi S.p.A. reserves the right to change the information contained in this catalogue without notice.

170-02

09SPIX4

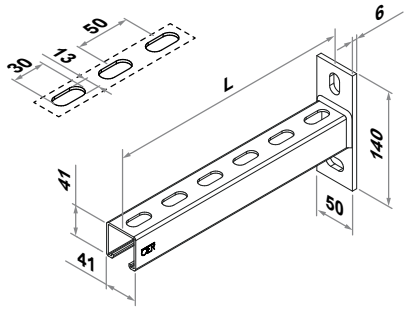

Heavy support bracket 41x41

• Material:Stainless steel AISI 304 EN 10088

CHARACTERISTICS: heavy bracket support with section C. Inside the two bending of the profile there is an indentation which makes the grip and keeping of rapid attachment components easier.There is a graduated scale for easier cutting to size at the construction site.The fixing plate has two holes which allows a greater flexibility for the attachment of the same to the base material (wall, ceiling, floor) both horizontally and vertically,through the use of anchors. The continuous welding (along the perimeter) of the 41x41 profile to the plate ensures an excellent strength to high workloads.
USE: The wallbracket allows to create the perfect support for plumbing, electrical, pipeline and air conditioning systems.

CODICE	mm	L [mm]	holes [mm] / plate		€ Each
17010	2,5	300	13x25	5	**125,93**
17030	2,5	400	13x25	5	**138,37**

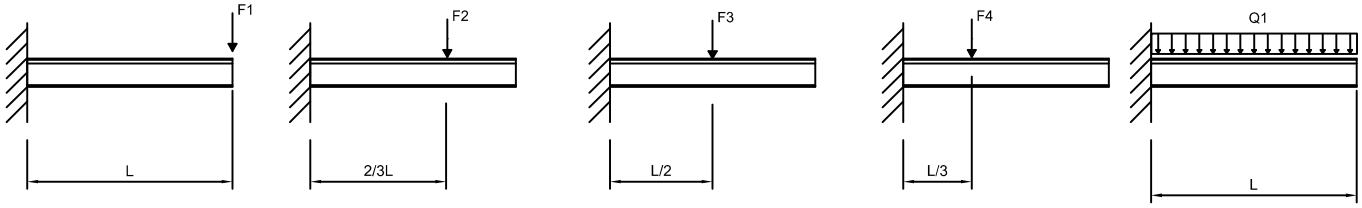

	L = 300 [mm]	L = 400 [mm]
F1 [kg]	123,2	69,3
F2 [kg]	209,0	156,8
F3 [kg]	278,7	209,0
F4 [kg]	418,0	313,5
Q1 [kg/m]	464,4	261,3

Condizioni di carico:

- Sollecitazione nel materiale inferiore all'85% dello snervamento;
- Oppure freccia massima di 1/200 (intesa come deformazione locale diviso lunghezza);
- La verifica del carico ammissibile è subordinata alla capacità di portata degli (a cura dell'applicatore).

Oteraccordi S.p.A. reserves the right to change the information contained in this catalogue without notice.

171-01

09SPIX4

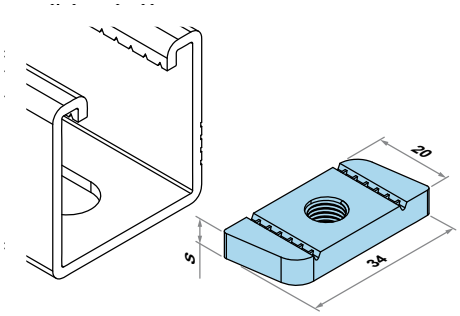

Heavy sliding nut

• Material:Stainless steel AISI 304 EN 10088

CHARACTERISTICS: the rectangular heavy nut has two lateral grooves for a quick and safe attachment to the profile belonging to heavy series. It has a central threaded hole for the screwing of the threaded bars M8, M10 .
USE: It's used to realize connections between profile/brackets and threaded bars to fix the pipe clamps. It must be used together with a threaded rod / socket and a hexagonal nut.

CODICE	Ø	mm	S [mm]				€ Each
17100	M8	41x21/41/61/82	6	220	110	10	**4,51**
17110	M10	41x21/41/61/82	8	280	135	10	**5,44**

171-02

09SPIX4

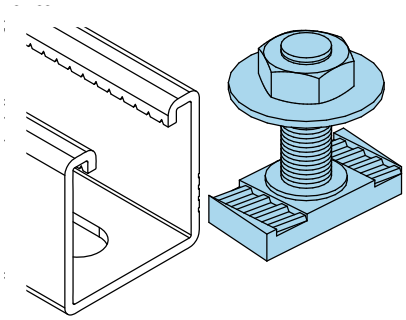

Hammer screw with nut/washer

• Material:Stainless steel AISI 304 EN 10088

CHARACTERISTICS: the hammer screw is composed of a heavy nut with M10 thread of 30mm length, of a washer art. 179-09 and a hexagonal nut art. 179-02. The two lateral grooves on heavy nut allows a quick and rapid attachment to heavy profile.
USE: used to make connections between the profiles / brackets and components or to fix the support clamps to the pipes . It locks with the washer and the hexagon nut included the kit.

CODICE	MxL	mm				€ Each
17120	M10x30	41x21/41/61/82	325	180	10	**8,24**

Oteraccordi S.p.A. reserves the right to change the information contained in this catalogue without notice.

172-01

09SPIX4

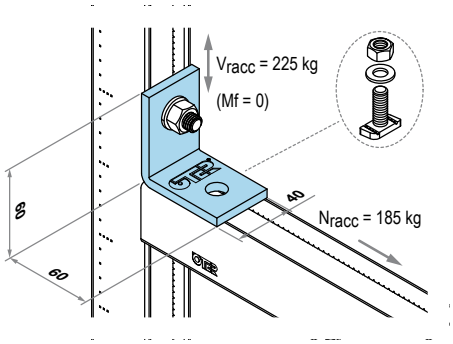

Angle 90° connection with 2 holes

• Material:Stainless steel AISI 304 EN 10088

CHARACTERISTICS: 90 ° angle plate with two holes for the passage of the hammer screw art. 171-02 and belonging to the heavy fixing series.
USE: The plate allows to connect two sections or two profiles at 90° angle without welding .It's used for the realization of even complex and articulated structures for the support of heavy installations such as plumbing or industrial implantations .

CODICE	Ø	mm	mm		€ Each
17200	13	41x21/41/61/82	4	10	12,12

173-01

09SPIX4

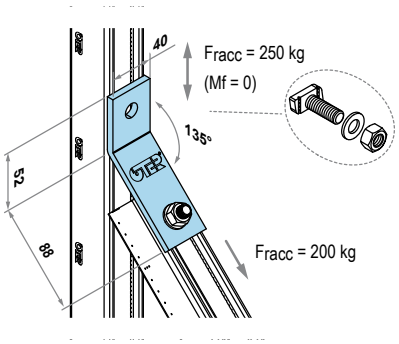

Angle 135° connection with 2 holes

• Material:Stainless steel AISI 304 EN 10088

CHARACTERISTICS: 135 °angle plate with two holes for the passage of the hammer screw art. 171-02 and belonging to the heavy fixing series.
USE: The plate allows to connect two sections or two profiles at 45° angle without welding. It is often used to create reinforcement for example in the earthquake-resistant structures or structures for supporting pipes subject to thermal expansion .

CODICE	Ø	mm	mm		€ Each
17300	13	41x21/41/61/82	4	10	17,10

Oteraccordi S.p.A. reserves the right to change the information contained in this catalogue without notice.

177-01

09SPIX4

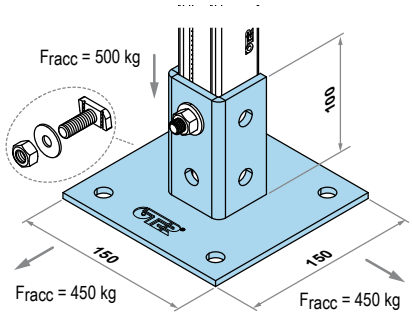

Base plate for profile

- Material: AISI 304 Stainless steel EN 10088

CHARACTERISTICS: The base plate is equipped with six holes and is suitable for profiles 41x21, 41x41 and 41x61 belonging to the heavy bracket and can be installed as floor or wall. The presence of the holes on the three sides of the plate allows a versatility of orientation of the profile. The base plate has four equally-spaced holes for the anchors housing, this allows a greater surface support and a better distribution of the stresses acting on the anchors. The hole on the plate is 13 mm.
USE: The base plate can be applied to the wall to fix heavy sections or can be applied to the floor, instead of threaded bars, when the structure requires greater stiffness. It is also possible to create brackets combining a section of profile, after verification of the structure.

CODICE	Ø	mm	mm		€ Each
17700	13	41x21/41/61	6	1	89,20

178-01

09SPIX4

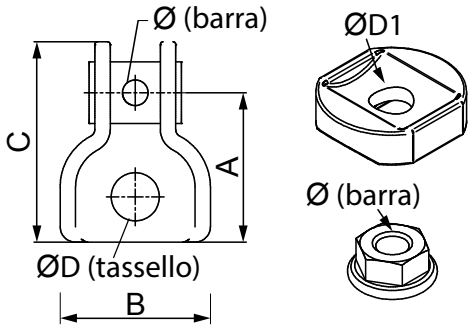

UNIVERSAL ANGLE

- Support in malleable cast iron
- Steel pin
- Flanged steel nut class 8.8
- Electrolytic galvanizing UNI ISO 2081:2018 th. 6 ÷9 [µm]

CHARACTERISTICS: composed of a universal angle, a flanged-hexagonal nut and a locking plate. Suitable for anchoring threaded bars on inclined surfaces or steel beams. To the threaded bar it is necessary to screw the flanged-hexagonal nut, it is therefore necessary to insert the locking plate and to screw the latter to the universal angle. Then, you must lock the desired angle by fixing the flanged-hexagonal nut with the locking plate.
USE: to make fixings on inclined surfaces, fixed points and to realize longitudinal or transverse bracing to counteract the thrust due to thermal expansion or seismic actions.

CODICE	Ø	A [mm]	B [mm]	C [mm]	ØD [mm]	ØD1 [mm]			€ Each
17800	M8	26	40	51	12,5	10,5	580	1/50	**102,91**
17810	M10	26	40	51	12,5	10,5	800	1/50	**149,57**
17820	M12	33	50	71	12,5	16,5	1300	1/25	**226,41**

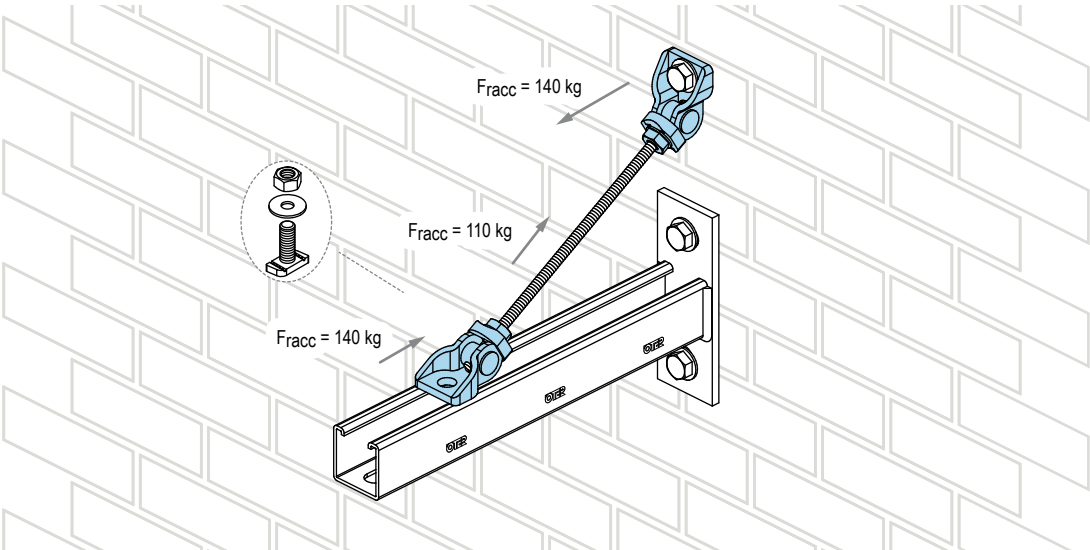

Oteraccordi S.p.A. reserves the right to change the information contained in this catalogue without notice.

179-01

09SPIX4

Socket

• Material: Stainless steel cylinder AISI 304 EN 10088

CHARACTERISTICS: the socket is a hexagonal cylinder with internal metric thread.
USE: for the purpose of threaded rods extensions. The internal length of the thread enables to screw for half the end of a bar, and for the other half the end of the second threaded bar.

CODICE	Ø	Length [mm]		€ Each
17900	M8	24	20/100	2,80
17910	M10	30	20/100	5,53

179-02

09SPIX4

Hexagonal nut

• Material:Stainless steel AISI 304 EN 10088

CHARACTERISTICS: hexagonal nut metric thread conforms to UNI 5588 (DIN 934).
USE: it is used in combination with threaded metric rods

CODICE	∅ [mm]		
17920	M8	10/100	0,35
17930	M10	10/100	0,70
17940	M12	10/100	0,96

Oteraccordi S.p.A. reserves the right to change the information contained in this catalogue without notice.

179-03

09SPIX4

Heavy washer

• Material:Stainless steel AISI 304 EN 10088

CHARACTERISTICS: Metal perforated dics with 40 mm external diameter . It's used with a bolt or a threaded bar.Suitable for heavy fixing system. Conform to UNI 6592 and ISO 7089
standard.
USE: It's used to fasten the element to be fixed and is positioned between the screw/hexagonal nut and the element.

CODICE	Ø	[mm]	[mm]		€ Each
17950	M8 -Ø32	41x21/41/61/82	2,5	10	**0,63**
17960	M10 -Ø40	41x21/41/61/82	2,5	10	**0,91**
17970	M12 -Ø48	41x21/41/61/82	4	10	**1,16**

179-04

09SPIX4

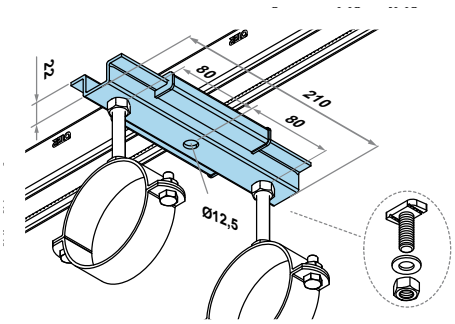

Sliding for profile

• Material: AISI 304 stainless steel EN 10088
• Polyamide sliding rails with glass fibres

CHARACTERISTICS: max slip length 100 mm - temperature resistance from -30° C to + 200° C - maximum load capacity with floor mounting 130 Kg - maximum load capacity with floor mounting 110 Kg - static friction coefficient μ0 = 0,18 - static coefficient of friction μ0 = 0,18 - sliding coefficient of friction: μ0 = 0,14 - thermal conductivity: 0,33 W]
USE:for the fixing of pipes with sliding support to compensate the system expansion

CODICE	∅ [mm]		€ Each
17980	12,5	12	**194,84**

Oteraccordi S.p.A. reserves the right to change the information contained in this catalogue without notice.

TECHNICAL SPECIFICATIONS PROFILES

		170-01
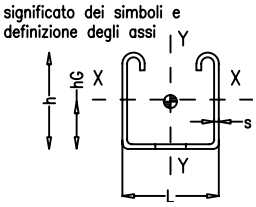		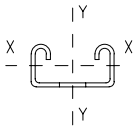
Thick profile	s [mm]	2,5
Height profile	h [mm]	41
Widht profile	L [mm]	41
Area of the cross section	mm^2	304,00
Lenght of the rod	m	3,00/6,00
Materials		A4-70
Allowable stress	δ_{amm} [N/mm^2]	240
Additional safety coefficient		0,9
Surface treatment		
not provided (stainless steel)		yes
X-X Axis features		
Distanze center of gravity from the bottom profile	h_G [mm]	20,81
Moment of inertia X axis Ix	I_x [mm^4]	61704
Flexural modulus (fiber stretched on the bottom)	Wyf [mm^3]	2965,1
Flexural modulus (fiber stretched open side)	Wya [mm^3]	3056,2
Radius of gyration	i_x[mm]	14,2
Allowable moment	M_x [Nm]	660,1
X-Y Axis features		
Moment of inertia Y axis	I_y [mm^4]	91964
Flexural modulus	W_x [mm^3]	4486,0
Radius og gyration	i_x[mm]	17,4
Allowable moment	M_x [Nm]	969,0

note

SANITARY
FIXING

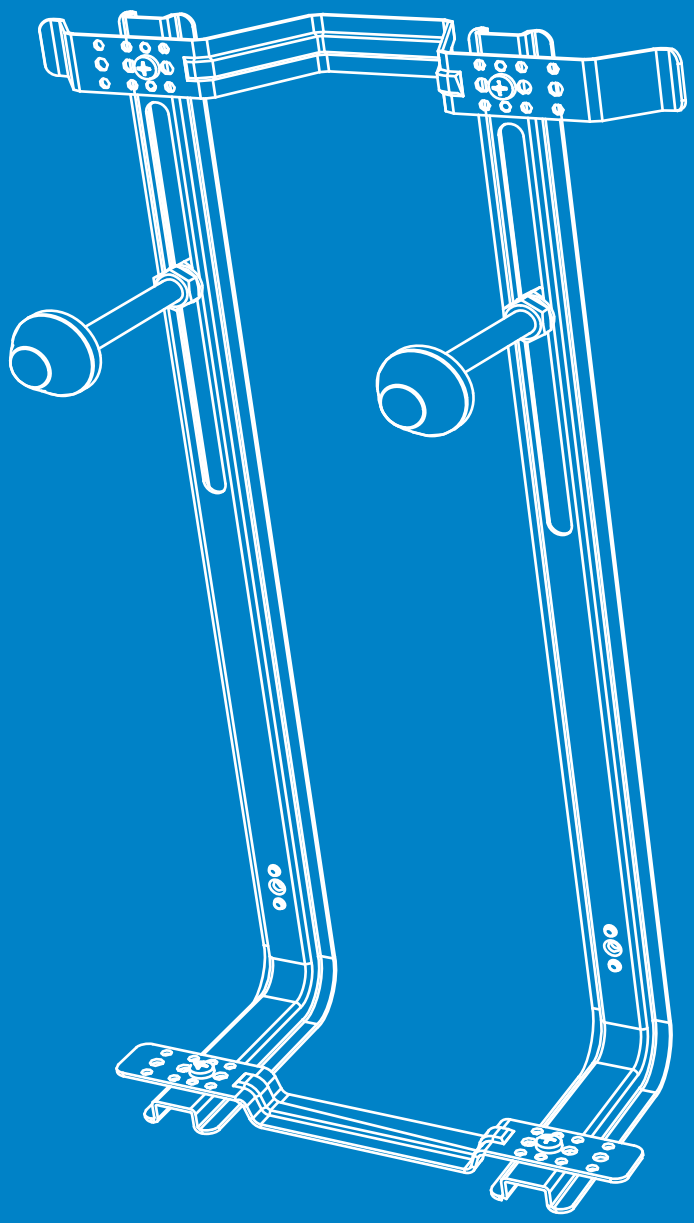

OTER FIX

07FISAN

Telescopic bracket for expansion vessel up to 50 Lt

USE: The telescopic bracket allows the installation of expansion tank for heating and multifunctional.
CHARACTERISTICS: a 3/4 or 1 diameter socket is welded to the telescopic bracket.
The sturdy boom can be extended from 160 mm up to 250 mm to allow for adjustment of the distance between the expansion tank and the wall.
With the telescopic bracket expansion vessels with capacity up to 50 can be installed.
Increased buttonholes allow better adjustment
The support plate and the reinforcement arm are painted in RAL 9016.
PACKAGE: Complete with n. 4 screws Ø6x70 (UNI 8117) and n. 4 dowels M10x50.

CODICE	DN			€ Each
45001	3/4"	60	1	24,49
45002	1"	60	1	28,21

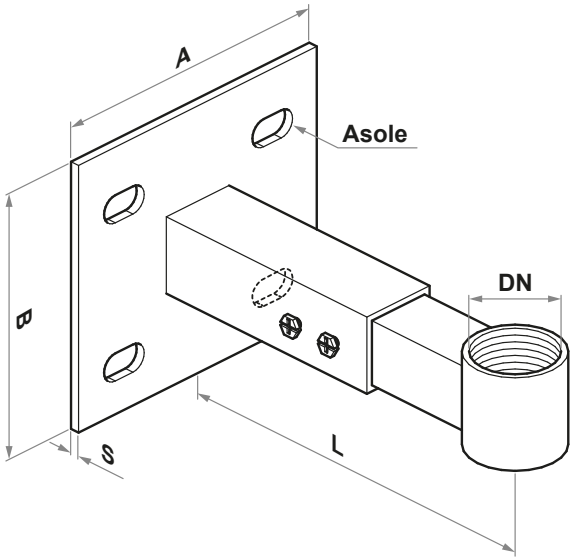

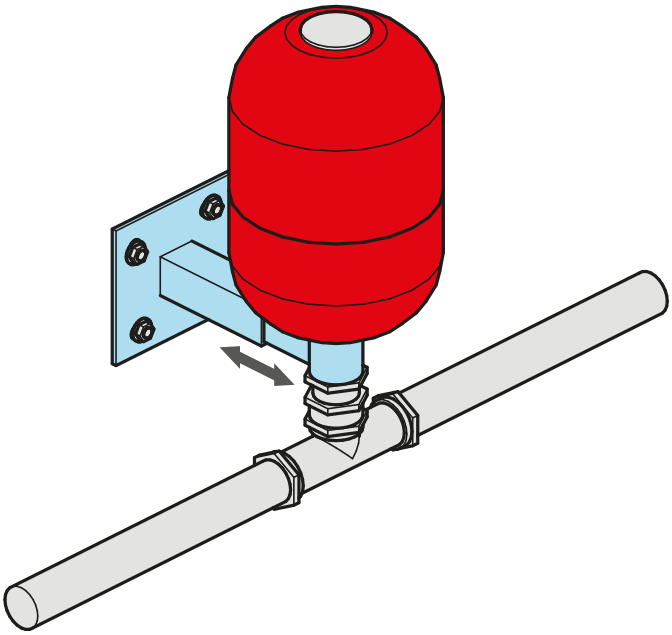

DN [inch]	A [mm]	B [mm]	S [mm]	L [mm]	Asole [mm]	Carico raccomandato [Kg]
3/4"	95	88	3	160÷250	9 x 15	60
1"						

451

07FISAN

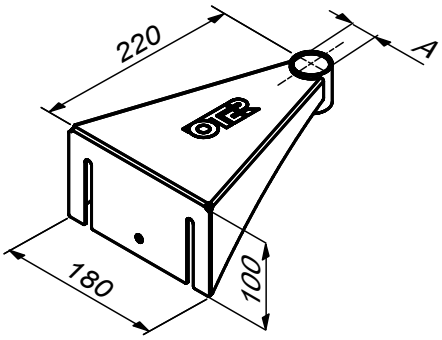

Bracket for expansion tank

- Material: S235JR EN 10025
- Electrolytic galvanizing UNI ISO 2081:2018 th. 6 ÷ 9 [µm]

CHARACTERISTICS: the particular shape of the bracket allows the installation to the floor of the expansion tank before wall mounting.
USE: for wall mounting of expansion tanks. The special attack allows to mount the bracket with tank already installed. The expansion tank can be mounted both above and below the bracket. On request we can produce special versions according to customer specifications. For fixing, please use articles 857 and 119-02-M8 Ø30

CODICE	A [mm]			€ Each
45101	3/4"	80	5	**54,53**
45102	1"	80	5	**54,53**

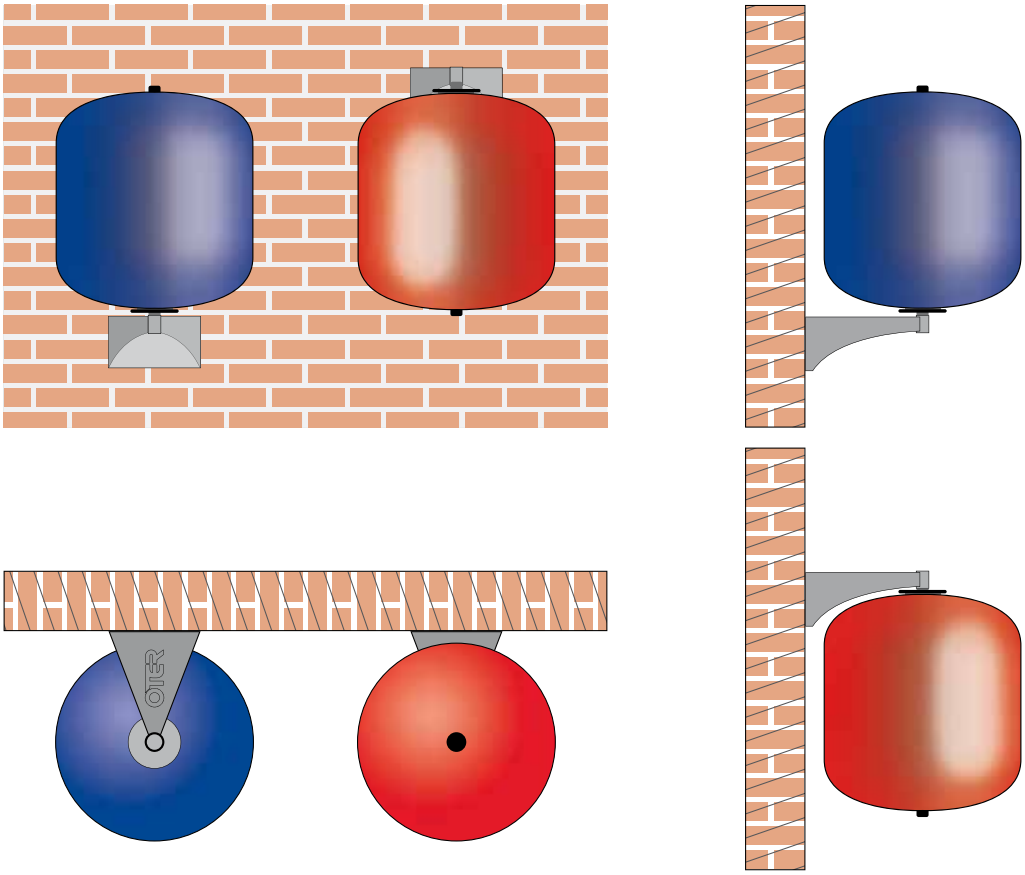

Oteraccordi S.p.A. reserves the right to change the information contained in this catalogue without notice.

419

07FISAN

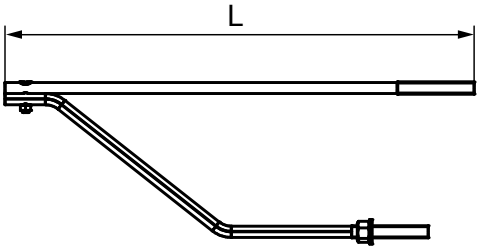

Painted wash basin bracket

- Material: S235JR EN 10025
- Electrolytic galvanizing UNI ISO 2081:2018 sp. 6 ÷ 9 [µm]
- White powder painting RAL 9010 sp. 70 ÷ 80 [µm]

CHARACTERISTICS:couple of galvanized and painted brackets for placement of wash-basins. Simple installation system, allows a proper distribution of the load applied. Equipped with dowels, adjusting screws and washers.
USE: the adjustment is made after bracket mounting operating with the key on the support nut. For a correct installation, do not use roto-percussion during the execution of the hole on the wall built with bricks, be careful not to break internal part of bricks.

CODICE	L [mm]		C		Couple
41901	340	75	1	10	**44,75**
41902	460	65	1	10	**46,34**

flow rate values refer to a perfectly executed installation

420

07FISAN

Fastening system for sanitary

- Material: S235JR EN 10025
- Electrolytic galvanizing UNI ISO 2081:2018 sp. 6 ÷ 9 [µm]

CHARACTERISTICS:the package includes n ° 2 galvanized iron wood screws, n ° 2 nylon studs with integral nut and n ° 2 dowels.
USE: for wall mounting of sanitary and toilet external flush tanks . Suitable on concrete, solid and perforated brick. Make sure that the hole depth is sufficient and it is also recommended to make the holes without hammer on tiles and bricks.

CODICE			mm	C		Couple
42001	M8x90	10x60	10	1	50	**2,27**
42002	M10x120	12X60	12	1	50	**3,27**
42003	M10x140	12X60	12	1	50	**4,00**

Oteraccordi S.p.A. reserves the right to change the information contained in this catalogue without notice.

430

07FISAN

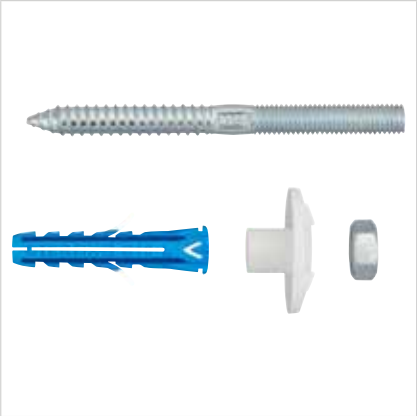

Fastening system for wash basin

- Material: S235JR EN 10025
- Electrolytic galvanizing UNI ISO 2081:2018 th. 6 ÷ 9 [µm]

CHARACTERISTICS: the package includes n. 2 galvanized iron wood screws, n. 2 eccentric nylon studs for setting the washbasin, n ° 2 galvanized nuts and No. 2 dowels.
USE: for wash basins wall mounting. Suitable on concrete, solid and perforated brick. Make sure that the hole depth is sufficient and it is also recommended to make the holes without hammer on tiles and bricks.

CODICE			mm	C		Couple
43001	M8x90	10x60	10	1	50	**1,75**
43002	M10x120	12X60	12	1	50	**2,74**
43003	M10x140	12X60	12	1	50	**3,74**
43004	M10x180	12X60	12	1	25	**5,04**
43005	M10x220	12X60	12	1	25	**7,20**

431

07FISAN

Fastening system for wash basin

- Material: S235JR EN 10025
- Electrolytic galvanizing UNI ISO 2081:2018 th. 6 ÷ 9 [µm]

CHARACTERISTICS: The package includes n. 2 double thread bolts with stop, n. 2 nylon eccentric studs for setting of the washbasin, n. 2 nuts and n. 2 dowels .
USE: for wall fixing of washbasins on perforated brick , solid brick and cement blocks.

CODICE			mm	C		Couple
43101	M10x130	14X73	14	1	50	**11,51**

Oteraccordi S.p.A. reserves the right to change the information contained in this catalogue without notice.

440

07FISAN

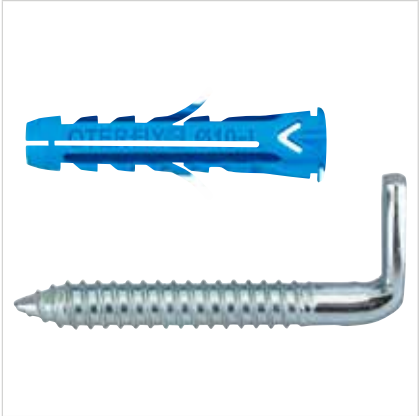

ANCHOR

- Material: S235JR EN 10025
- Electrolytic galvanizing UNI ISO 2081:2018 sp. 6 ÷ 9 [μm]

CHARACTERISTICS:he package includes n ° 2 galvanized fastening device, n ° 2 dowels.
USE:suitable for fixing boilers, water heaters and flush tanks. Suitable on concrete, solid brick and perforated brick. Make sure that the hole depth is sufficient and it is also recommended to make the holes without hammer on tiles and bricks.

CODICE				C		Couple
44001	10x60	10	M8x70	1	50	1,59
44002	12x60	12	M10x80	1	50	1,90
44003	12x60	12	M10x100	1	50	2,33

441

07FISAN

ANCHOR

- Material: S235JR EN 10025
- Electrolytic galvanizing UNI ISO 2081:2018 sp. 6 ÷ 9 [μm]

CHARACTERISTICS: the package includes n. 2 galvanized fasteners device ,n. 2 anchors for perforated bricks.
USE: suitable for fastening of boilers, water heaters and flush tanks. Suitable for perforated brick. Make sure that the hole depth is sufficient and it is also recommended to make the holes without hammer on tiles and perforated bricks.

CODICE				C		Couple
44101	14x73	14	M10x73	1	50	7,32

Oteraccordi S.p.A. reserves the right to change the information contained in this catalogue without notice.

460-I

07FISAN

Stainless steel fastening system for Wc and Bidet

• Material: stainless steel AISI 304 2B EN 1.4301

CHARACTERISTICS: n. 4 screws in stainless steel double thread, n. 4 nuts in stainless steel , n. 4 nylon studs, n. 4 anchors. Resistant materials corrosion. The socket prevents the screw contact with the ceramic.
USE: suitable for fixing sanitary to the floor. Make sure that the hole depth is sufficient.

CODICE				C		Buste
46002	M6x76	8x40	8	2	50	**5,90**
46003	M6x90	8x40	8	2	50	**8,14**

460-O

07FISAN

Brass fastening system for Wc and Bidet

• Material: brass CW614N

CHARACTERISTICS: The package includes n. 4 brass double thread screws, n. 4 nuts in galvanized steel ,n. 4 nylon studs, n. 4 dowels. Materials resistant to corrosion. The socket prevents the screw contact with the ceramic.
USE: suitable for fixing sanitary to the floor. Make sure that the hole depth is sufficient.

CODICE				C		Buste
46004	M6x76	8x40	8	2	50	**7,68**

Oteraccordi S.p.A. reserves the right to change the information contained in this catalogue without notice.

460-FT

07FISAN

Fastening system for Wc and Bidet

- Material: S235JR EN 10025

CHARACTERISTICS: n° 4 double thread steel screws, n° 4 nuts, n° 4 nylon studs, n° 4 dowels. Materials resistant to corrosion. The socket prevents the screw contact with the ceramic.
USE: suitable for fixing sanitary to the floor. Make sure that the hole depth is sufficient.

CODICE				C		Buste.
46001	M6x76	8x40	8	2	50	**4,32**

470-O

07FISAN

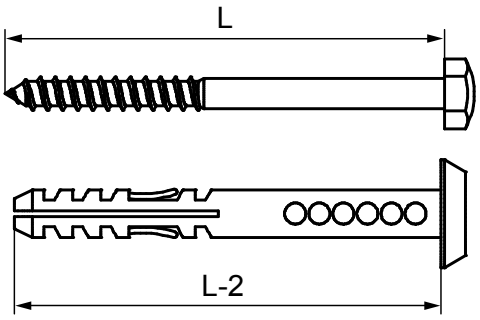

Brass fastening system for Wc and Bidet

- Material: brass CW614N
- Nickel plating th. 6 ÷ 9 [µm]

CHARACTERISTICS: the package includes n. 4 nickel-plated brass pins, n. 4 dowels. Materials resistant to corrosion.
USE: suitable for sanitary fixing to the floor . Make sure that the hole depth is sufficient.

CODICE			L [mm]	C		Buste
47001	8x71	8	71	2	50	**6,87**

Oteraccordi S.p.A. reserves the right to change the information contained in this catalogue without notice.

480-N

07FISAN

Lateral fastening for Wc and Bidet

• Material self tapping screw: AISI 304 2B EN 1.4301

CHARACTERISTICS: the package includes n°2 TE Ø 6x55 galvanized screws, n°2 dowels, n°2 nylon brackets , n°2 chromed cover screw caps in A.B.S., n°2 white screw caps in A.B.S., n°2 self tapping screws TS ø5x45 stainless steel AISI 304 2B EN 1.4301.The nylon bracket ensures a more stable attachment.The vertical side presents more 'holes for easy installation to the sanitary.
USE: suitable for lateral and floor fixing for wc and bidet.

CODICE		C		Couple
48001	8x40	1	25	7,37

490-01

07FISAN

Threaded rod kit for M12

• Material: DIN 976 steel 4.8 galvanized white
• Electrolytic galvanizing UNI ISO 2081:2018 th. 6 ÷ 9 [µm]

CHARACTERISTICS: the package includes n°2 galvanized threaded rods M12, n°2 thread protection tubes M12, n°2 galvanized rectangular nuts M12, n°2 galvanized exagonal nuts M12, n°2 galvanized washers ø12.
USE: suitable to fix sanitary to art.490.

CODICE		€ Each
49004	1	6,72

Oteraccordi S.p.A. reserves the right to change the information contained in this catalogue without notice.

490-BASE

07FISAN

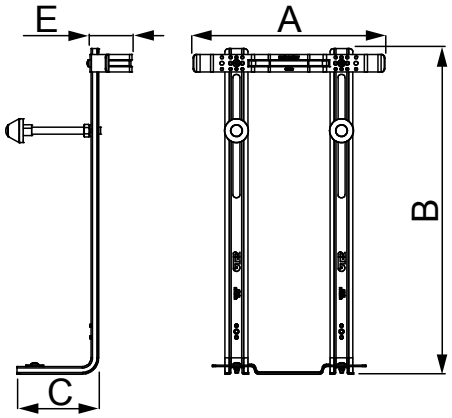

Fastening system for suspended sanitary "Base"

• Material: DX51 - Z140 EN 10142

CHARACTERISTICS: According to WC legislation: UNI EN 997 - According to BD legislation: UNI EN 14528:2018 (400 kg).
USE: structure for wc and bidet sanitary installation.

CODICE	model	mm	A [mm]	B [mm]	C [mm]	E [mm]				€ Each
49000	smontato	-	320	550	130	80	400	1	132	**36,74**
49001	montato	180	320	550	130	80	400	16	-	**41,55**
49002	montato	230	320	550	130	80	400	16	-	**43,95**

490-PLUS

07FISAN

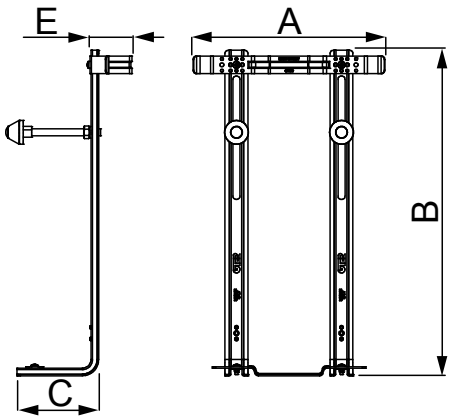

Suspended sanitary fixing BASE-PLUS

• Material: DX51 - Z140 EN 10142

CHARACTERISTICS: according to toilet standard: UNI EN 997:2018 – according to BD standard: UNI EN 14528:2018. The package includes a bracket to be combined with isophonic clamp art.843 and art.846:
- BIDET version : nr.1 clamp Ø 50÷55
- TOILET version : nr.1 clamp Ø 50÷55 e nr. 1 clamp Ø 90÷93

USE: frame for the installation of toilet fixing and bidets with a distance from 160 to 230.

CODICE	model	A [mm]	B [mm]	C [mm]	E [mm]	NOTE			€ Each
49003	smontato	320	550	130	80	con kit WC-Bidet	400	1	**92,70**

Oteraccordi S.p.A. reserves the right to change the information contained in this catalogue without notice.

490-BIDET

07FISAN

Bracket for anchoring bidet pipes

• Material: DX51 - Z140 EN 10142

CHARACTERISTICS: made of a bracket and an isophonic clamp art.846 Ø 50÷55.
USE: to make easier the positioning of the water discharge pipe and hot and cold water supply pipes. The particular hole allows to use both brass extension and pressfittings elbows.

CODICE		€ Each
49005	1	24,78

490-WC

07FISAN

Bracket for anchoring toilet pipes

• Material: DX51 - Z140 EN 10142

CHARACTERISTICS: made of a bracket and an isophonic clamp art.846 Ø 50÷55 for drain pipe toilet box + an isophonic clamp art.846 Ø 90÷93 for toilet drain.
USE: to make easier the positioning of the sewage drain pipe and drain toilet box.

CODICE		€ Each
49006	1	37,57

Oteraccordi S.p.A. reserves the right to change the information contained in this catalogue without notice.

491

07FISAN

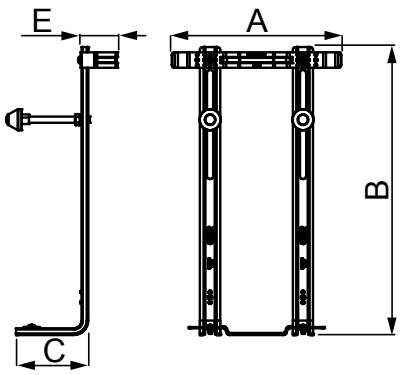

Fastening system suspended sanitary "WELDED"

- Material: DX51 - Z140 EN 10142

CHARACTERISTICS: according to UNI EN 997:2018 - according to BD RULE: UNI EN 1452:2018
USE: all the structures are mounted with two or four attack point.

CODICE	model	mm	A [mm]	B [mm]	C [mm]	E [mm]			€ Each
49100	smontato	180	400	545	130	80	400	1	**61,28**
49101	saldato	180	400	545	130	80	400	1	**61,28**

495-MT

07FISAN

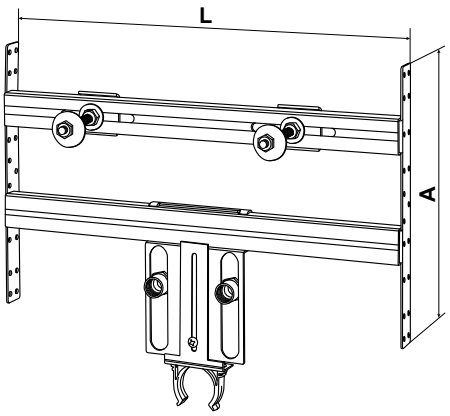

Wash basin support

- Material: DX51 - Z140 EN 10142 Electrolytic galvanizing UNI ISO2081:2018 th.6 ÷ 9

CHARACTERISTICS: according to UNI EN 14688. Structure supplied assembled.
USE: self-supporting frame of simple installation for all types of washbasins on masonry walls. The threaded bars for quick locking by moving horizontally make the adjustment flexible depending on the distance between the washbasin. Frame width 500 mm. The bracket is provided with a quick coupling of the exhaust pipe Ø 50.

CODICE	A [mm]	L [mm]			€ Each
495MT	310	500	150	1	**150,57**

Oteraccordi S.p.A. reserves the right to change the information contained in this catalogue without notice.

495-MT-DS

07FISAN

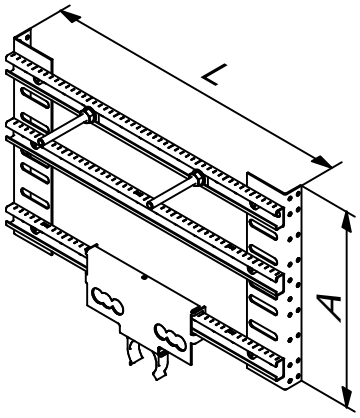

Wash basin support for people with disabilities

- Material: DX51 - Z140 EN 10142
- Electrolytic galvanizing UNI ISO 2081:2018 sp. 6 ÷ 9 [µm]

CHARACTERISTICS: the structure is supplied assembled. Performance requirements UNI EN 14688:2018.
USE: self-supporting frame of simple installation for all types of washbasins on masonry walls. The threaded bars for quick locking by moving horizontally make the adjustment flexible depending on the distance between the washbasin. Frame width 750 mm. The bracket is provided with a quick coupling of the exhaust pipe.

CODICE	A [mm]	L [mm]			€ Each
495MD	310	750	150	1	**158,02**

Struttura semplice e pratica nell'installazione.
Si adatta a tutte le condizioni del cantiere.
Possibilità di regolare l'interasse per adattarlo a tutti i lavabi presenti sul mercato.

Il telaio confezionato assemblato e realizzato in lamiera zincata.

La struttura flessibile consente di realizzare diverse misure anche superiori a quella indicata in tabella. Per ulteriori chiaramenti contattare l'ufficio tecnico Oteraccordi.

Fig.1

Sulla struttura sono presenti delle squadrette regolabili che permettono il fissaggio del telaio alla parete. ***(Fig.1)***

Le piastre per i raccordi idrici sono di facile regolazione e studiate per accettare qualsiasi raccordo a basetta in commercio.

Aggancio rapido del tubo di scarico Ø 50 mm.

Oteraccordi S.p.A. reserves the right to change the information contained in this catalogue without notice.

496-BD/WC

07FISAN

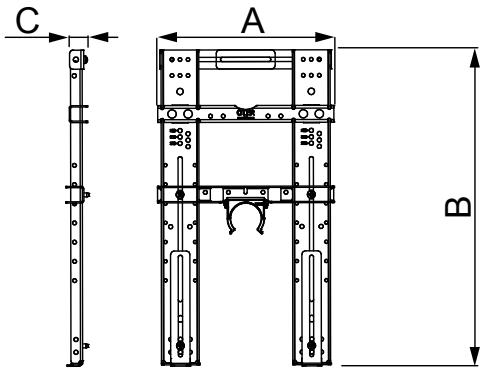

Suspended sanitary fixing for toilet and bidet

• Material: DX51 - Z140 EN 10142

CHARACTERISTICS: according to standard UNI EN 14528:2018. Inside the box it's the universal bracket to be combined with an isophonic clamp art.846:
- BIDET version : nr.1 clamp Ø 50÷55
- TOILET version: nr.1 clamp Ø 50÷55 e nr. 1 clamp Ø 90÷93

The clamps are inside the packing.

CODICE	A x B x C [mm]					€ Each
49600	270x490x30	180-230	400	1	90	77,06

496-04

07FISAN

Plastic cover kit

• Cap material: nylon

USE: They fix the sanitary to the wall and have the function not to join the metal parts to the ceramic.

CODICE	C		Couple
49604	1	50	8,14

496-08

07FISAN

Threaded rod kit for M12

- Material: DIN 976 acciaio 4.8 zincato bianco
- Electrolytic galvanizing UNI ISO 2081:2018 th. 6 ÷ 9 [µm]

CHARACTERISTICS: the package includes n°2 galvanized threaded rods M12, n°2 thread protection pipes M12, n°2 galvanized rectangular nut M12, n°2 galvanized hexagonal nut M12, n°2 galvanized washers ø12.
USE: suitable to fix sanitary to structure art.496-WC e BD.

CODICE			€ Each
49608	1	1	13,01

497-WC

07FISAN

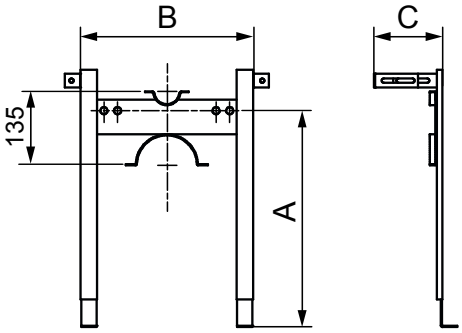

Fastening system for suspended sanitary WC

- Material: DX51 - Z140 EN 10142
- Electrolytic galvanizing UNI ISO 2081:2018 sp. 6 ÷ 9 [µm]

CHARACTERISTICS: according to UNI EN 997.
USE: structure for sanitary installation.

CODICE	A x B x C [mm]				€ Each
4970W	350÷500	180-230	400	1	89,39

Oteraccordi S.p.A. reserves the right to change the information contained in this catalogue without notice.

497-WCGE

07FISAN

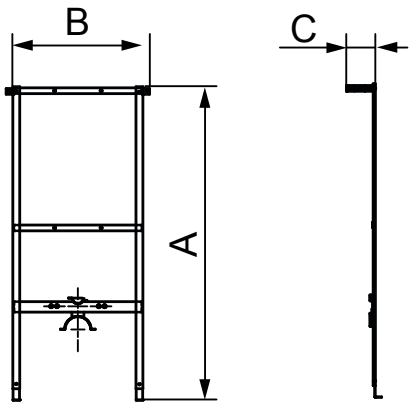

Fastening system for suspended sanitary WC

- Material: DX51 - Z140 EN 10142
- Electrolytic galvanizing UNI ISO 2081:2018 sp. 6 ÷ 9 [µm]

CHARACTERISTICS: according to UNI EN 997.
USE: structure for sanitary installation.

CODICE	A x B x C [mm]				€ Each
4970G	1300÷1450x559x100÷150	180-230	400	1	**169,38**

497-BD

07FISAN

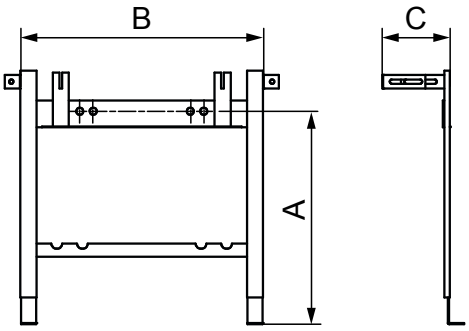

Fastening system for suspended sanitary bidet

- Material: DX51 - Z140 EN 10142
- Electrolytic galvanizing UNI ISO 2081:2018 sp. 6 ÷ 9 [µm]

CHARACTERISTICS: according to UNI EN 14528:2018
USE: structure for sanitary installation.

CODICE	A x B x C [mm]				€ Each
4970B	350÷500x450	180-230	400	1	**110,27**

Oteraccordi S.p.A. reserves the right to change the information contained in this catalogue without notice.

497-LV

07FISAN

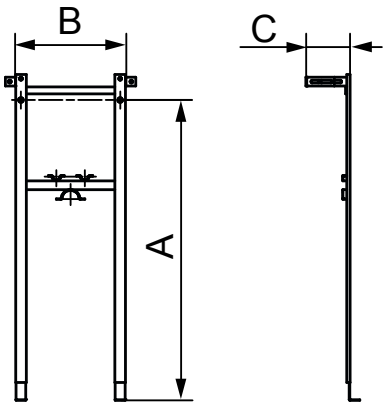

Fastening system for suspended sanitary wash basin

- Material: DX51 - Z140 EN 10142
- Electrolytic galvanizing UNI ISO 2081:2018 sp. 6 ÷ 9 [µm]

CHARACTERISTICS: according to UNI EN 14688:2018
USE: structure for sanitary installation.

CODICE	A x B x C [mm]	mm			€ Each
4970L	800÷950x284	180-230	400	1	112,92

Oteraccordi S.p.A. reserves the right to change the information contained in this catalogue without notice.

note

note

PLASTERBOARD

FIXING

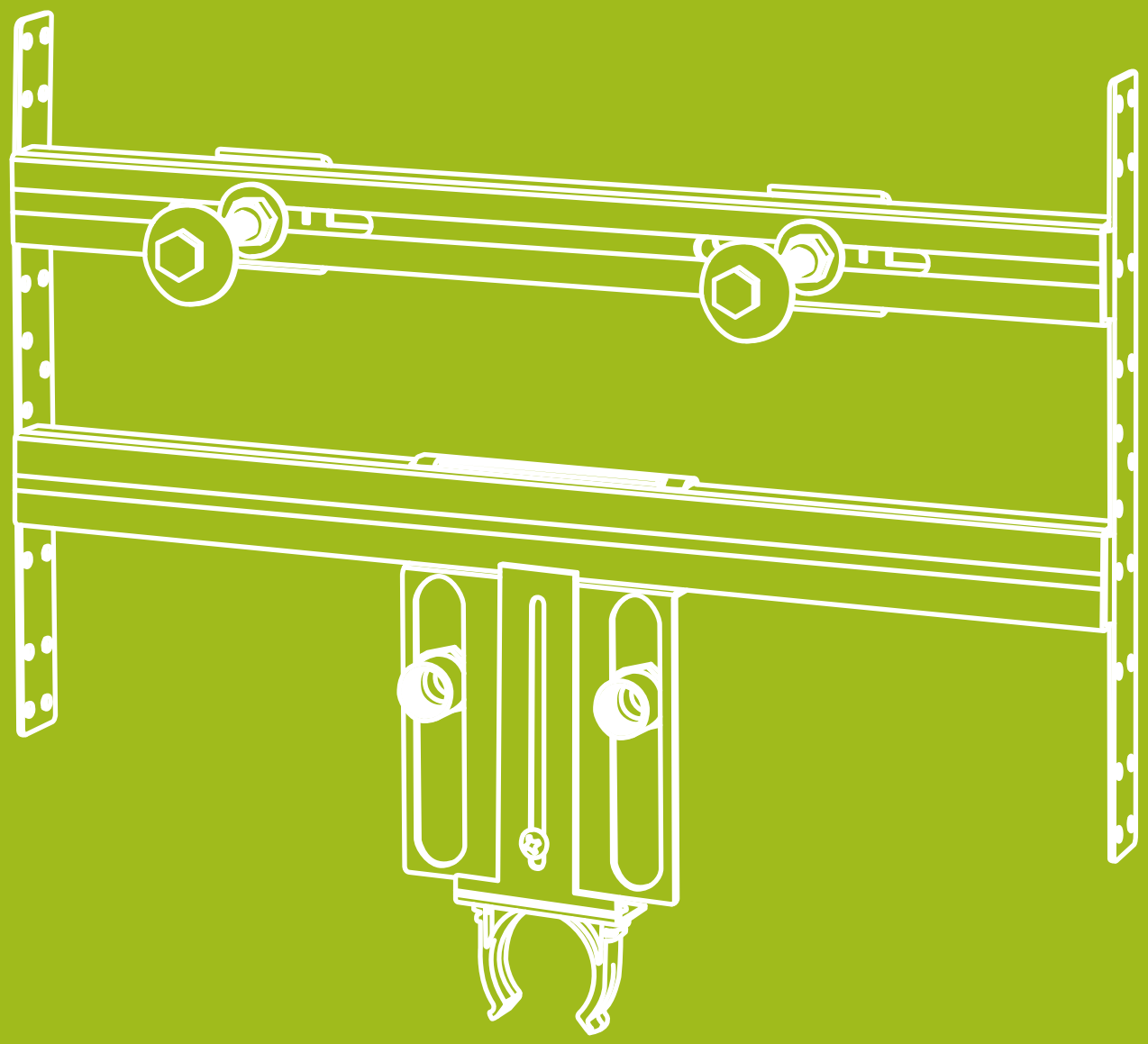

OTER FIX

417-IN

15FICAR

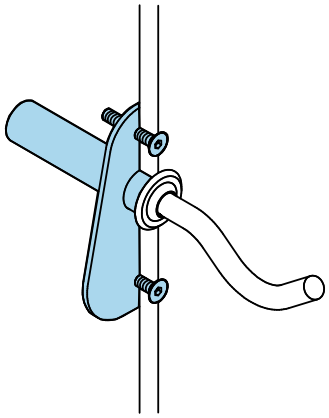

ADAPTOR MOD. "INVISIBILE" PATENTED

- Material: plate DD11 EN 10111 with tubular steel reinforcement S235JR EN 10025
- Electrolytic galvanizing UNI ISO 2081: 2018 thick. 6 to 9 [µm]

CHARACTERISTICS: designed for the installation of our telescopic wall brackets for radiators, on plasterboard walls.
USE:it is mounted on the walls not yet completed with one side open to allow mounting.The adapter mounted in interspace of the wall is designed to distribute to best applied load. It is fixed to the plasterboard with screws that attach the panels, while remaining invisible. It's applied on both single and double plasterboard sheets. When installation is finished only wall bracket is visible.

CODICE	∅ [mm]	mm	Model (*)		Couple
41701	15	414 - 418	A	10	**26,62**
41702	18	406 - 408 (200-220 mm) - 410 (200-220 mm) - 415 - 416V	B	10	**24,94**
41703	22	404 - 408 (270 mm) - 410 (270 mm)	C	10	**25,80**

(*)for matching with bracket see table at the bottom of the chapter

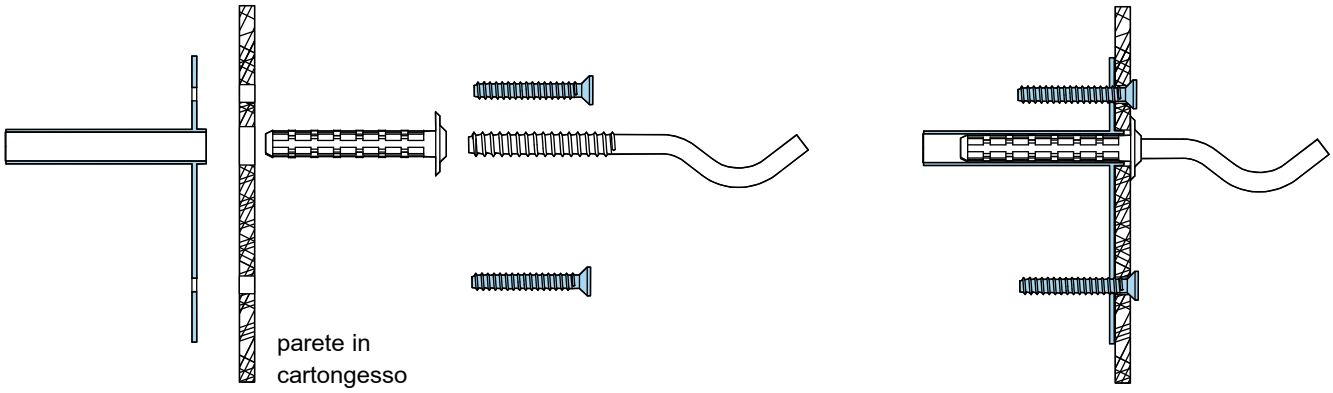

417-SA

15FICAR

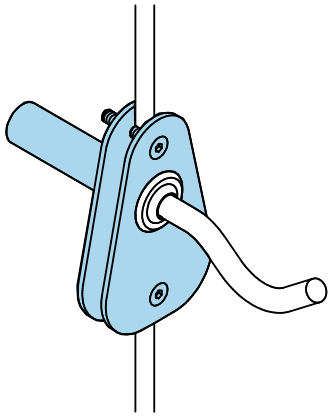

ADAPTOR MOD." SANDWICH" PATENTED

- Material: plate DD11 EN 10111 with tubular steel reinforcement S235JR EN 10025
- Electrolytic galvanizing UNI ISO 2081: 2018 thick. 6 to 9 [µm]

CHARACTERISTICS: pair of plates designed for the installation of our telescopic radiator wall brackets , on plasterboard walls. The adapter is mounted on plasterboard walls not yet completed, one side must be opened to allow the mounting.
USE:the adapter and the backplate are studied to distribute the applied load. The plasterboard is fixed thanks to a backplate inside the wall. The type of Sandwich locking adapter to plasterboard wall, allows to apply higher loads than other adapters. It's used on both single and double plasterboard panels.It's recommended for installation of cast iron radiators.

CODICE	∅ [mm]	mm	Model (*)		Couple
41704	15	414 - 418	D	10	**52,74**
41705	18	406 - 408 (200-220 mm) - 410 (200-220 mm) - 415 - 416V	E	10	**50,34**
41706	22	404 - 408 (270 mm) - 410 (270 mm)	F	10	**52,74**

(*)for matching with bracket see table at the bottom of the chapter

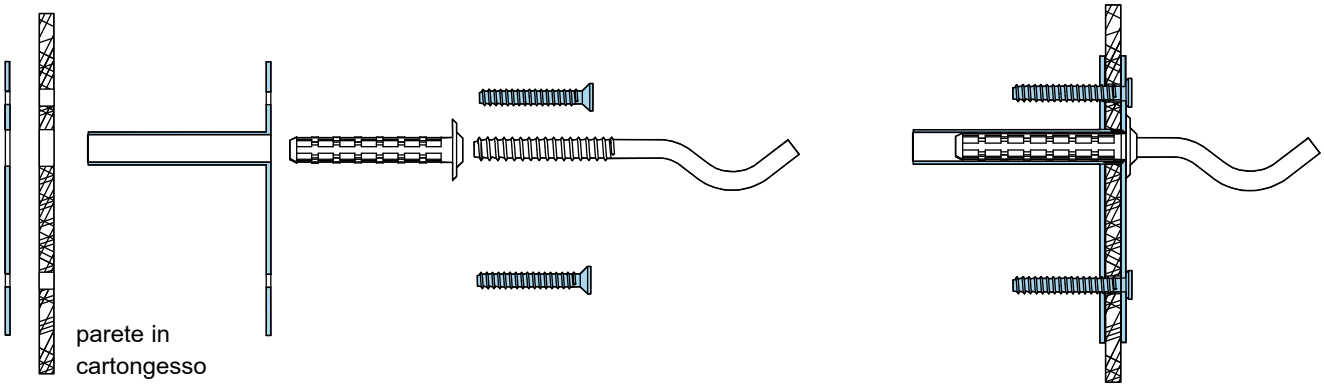

Oteraccordi S.p.A. reserves the right to change the information contained in this catalogue without notice.

417-ST

15FICAR

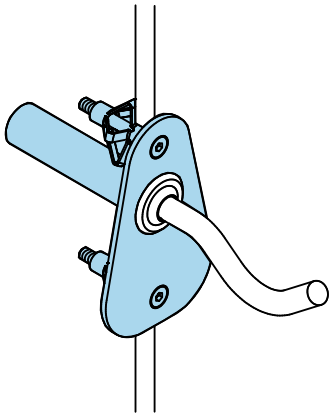

ADAPTOR MOD. "STANDARD" PATENTED

- Material: plate DD11 EN 10111 with tubular steel reinforcement S235JR EN 10025
- Electrolytic galvanizing UNI ISO 2081: 2018 thick. 6 to 9 [µm]

CHARACTERISTICS: designed for the installation of our telescopic supports for radiators, on plasterboard walls. The adapter can be mounted on plasterboard walls both finished and to be finished.
USE: the adapter installed outside the wall is designed to distribute the applied load in the best way. Fasten the plate in plasterboard with steel expansion anchors art. 5420-01. It is applied on both single and double plasterboard . Recommended use for changing in existing plants.

CODICE	∅ [mm]	mm	CC mm	Model (*)		Couple
41707	15	414 - 418	12,5	G1	10	**33,08**
41708	15	414 - 418	25	G2	10	**34,68**
41709	18	406 - 408 (200-220 mm) - 410 (200-220 mm) - 415 - 416V	12,5	H1	10	**31,48**
41710	18	406 - 408 (200-220 mm) - 410 (200-220 mm) - 415 - 416V	25	H2	10	**34,06**
41711	22	404 - 408 (270 mm) - 410 (270 mm)	12,5	J1	10	**32,27**
41712	22	404 - 408 (270 mm) - 410 (270 mm)	25	J2	10	**34,68**

(*)for matching with bracket see table at the bottom of the chapter

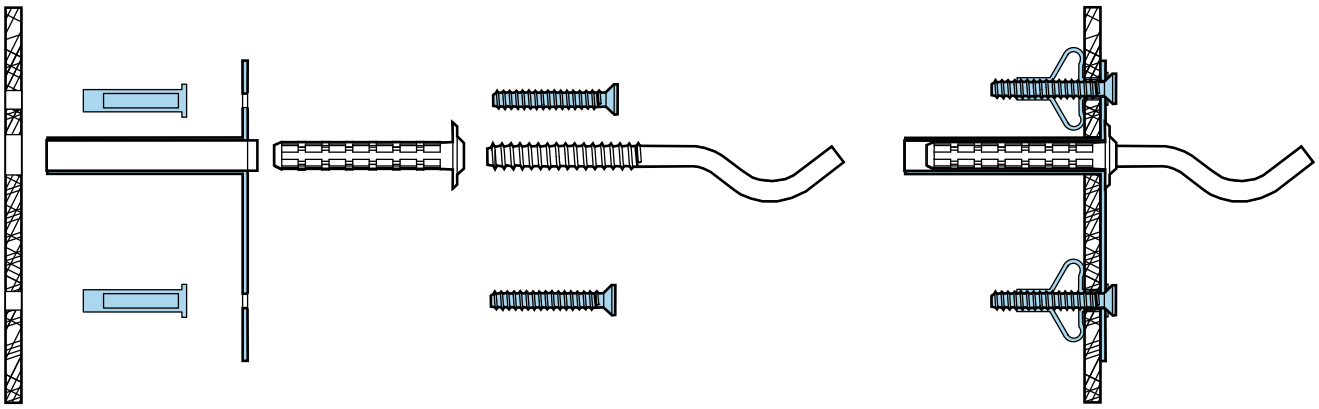

parete in cartongesso

491-CG

15FICAR

SELF STANDING FRAME SANITARY WC FOR DISABLED

- Material: DX51 - Z140 EN 10142
- Electrolytic galvanizing UNI ISO 2081: 2018 thick. 6 to 9 [µm]

CHARACTERISTICS: The main feature of the frame is its simple assembly. Once mounted and fixed to the two side profiles and to the screed/ floor, all other components of the structure can be adjusted both in height and width independently, thus allowing the necessary adjustments to be made to the sanitary and water and drainage pipes according to individual needs. The structure is fixed to the two pillars of the plasterboard by means of two side plates adjustable in width between 500 and 600 mm, while the attachment to the screed/ floor is with two bases of support placed at the foot of the pillars. The uprights can be moved horizontally to obtain a minimum distance of 180 mm up to 340 mm. On the two pillars of the structure there are four arms (threaded bars M12) that are used for the support of the toilet and can slide in height independently from the support plate of the two pipes, so as to adapt to any type of WC vase on the market. By eliminating two support arms you can adapt the frame to modern toilet for the disabled. The fixing plate of the pipes can also be independently adjusted in height and width. In the upper part there is an isophonic collar 50 mm for the water supply pipe and in the lower part an isophonic collar for the exhaust pipe 90 mm (adaptable also to pipes having Ø110 mm).
USE: suitable for the installation of toilet suspended for disabled on plasterboard walls (but also mixed, light and wooden) with two or four support holes . Designed to ensure an ideal support of the plasterboard slab so as to eliminate any movement of the sanitary. Also ideal for walls without tiles.

CODICE	mm				€ Each
491CG	180-230-340	400	1	20	**359,12**

N.B. the frame is supplied assembled.

Oteraccordi S.p.A. reserves the right to change the information contained in this catalogue without notice.

492-OR

15FICAR

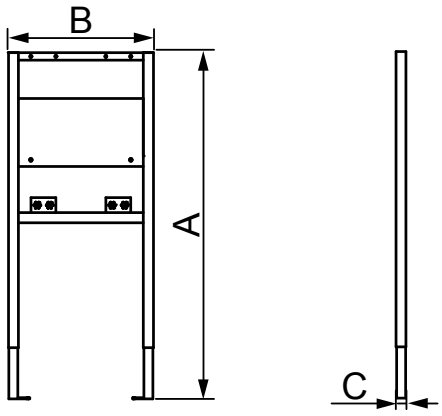

SELF STANDING FRAME FOR URINATORY

- Material: DX51 - Z140 EN 10142
- Electrolytic galvanizing UNI ISO 2081: 2018 thick. 6 to 9 [µm]

CHARACTERISTICS: The structure is adjustable up to a height of 430 mm, thanks to the telescopic feet of which it is provided and is therefore easily adaptable to any type of floor. To the upper cross it is possible to fix one of the two plates supplied, to connect the coupling, both threaded and pressed, for the connection of the water hose. The cross with the collar for fixing the exhaust pipe, can be adjusted in height, thus adapting to all types of urinals. The sanitary (urinal) is fixed directly on the multilayer marine wood table by means of two threaded bars M12x150, supplied with the frame, to be placed in the previously practiced passing holes taking into account the distance between the sanitary. The collar provided for the attachment of the exhaust pipe is isophonic 50 mm.
USE: Suitable for installation of all types of urinals on plasterboard or mixed walls, light or wood. Designed to ensure an ideal support of the plasterboard slab so as to eliminate any possible movement of the sanitary.

CODICE	A x B x C [mm]				€ Each
492OR	1000÷1430x450x30	400	1	20	**375,52**

N.B. the frame is supplied assembled.

492-WC

15FICAR

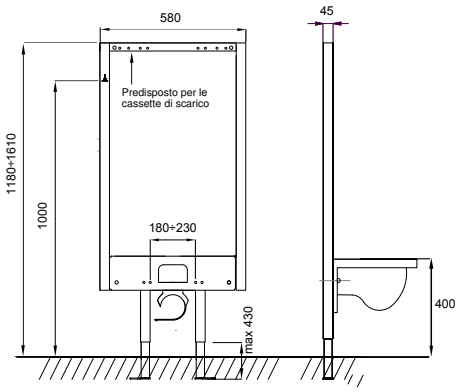

SELF STANDING FRAME FOR SANITARY WC

- Material: DX51 - Z140 EN 10142
- Electrolytic galvanizing UNI ISO 2081: 2018 thick. 6 to 9 [µm]

CHARACTERISTICS: The frame is composed of two volumes: the upper part for the housing of the rinsing box and the lower part for the support of any toilet vase suspended even for the most modern models with reduced support bases. The holes for the housing of the M12 threaded bars (support arms) supplied with the frame, allow a versatility of distance from 180 to 230 mm even when the frame is installed. The telescopic extensions, oriented at the rear, allow a stability even on bottoms where the stability is low. It is provided with a quick-fastening collar for the connection of the 90 mm exhaust curve (adaptable also for 110 mm pipes) and a semi 50 mm collar for the water delivery pipe.
USE: self-supporting frame suitable for the installation of all types of WC suspended on plasterboard walls, mixed light and wooden.

CODICE	mm				€ Each
492WC	180-230	400	1	20	**298,82**

N.B.the frame is supplied assembled.

493-BD

15FICAR

SELF SUPPORTING FOR BIDET

- Material: DX51 - Z140 EN 10142
- Electrolytic galvanizing UNI ISO 2081: 2018 thick. 6 to 9 [µm]

CHARACTERISTICS:the frame is very simple to assemble. Once mounted and fixed to the two side profiles and to the floor, all other components of the structure can be adjusted both in height and width independently, allowing, in this way, to make the necessary adjustments to the sanitary and water and drainage pipes according to individual needs. The structure is fixed to the two uprights of the plasterboard by two side plates adjustable in width between 500 and 600 mm, while the attachment to floor is with two bases of support placed at the bottom of the uprights.
The uprights can be moved horizontally to obtain a minimum distance of 180 mm up to 340 mm. It is supplied complete with two M12 threaded bars (support arms) that can also be adjusted in height on the two uprights and are independent from the support plate of the pipes so as to adapt the height of the sanitary also in the case of floating floors.The support plate has been designed to be able to regulate the hot and cold water supply pipes both by two 1/2 M/F brass threaded fittings (art. 529O OTER) and by two fittings with press-fit connection on multilayer pipes. On the bottom of the support plate there is a clip collar in nylon Ø50 mm for fixing the drain.
USE: self-supporting frame suitable for all types of suspended bidets thanks to the possibility of adjusting both the distance and the height of the bidet and water supply pipes. It is installed on plasterboard, mixed, light and wooden walls.

CODICE	mm			€ Each
4930B	180÷340	400	1	272,94

N.B. the frame is supplied assembled.

Oteraccordi S.p.A. reserves the right to change the information contained in this catalogue without notice.

493-WC

15FICAR

SELF SUPPORTING FOR WC

- Material: DX51 - Z140 EN 10142
- Electrolytic galvanizing UNI ISO 2081: 2018 thick. 6 ÷ 9 [µm]

CHARACTERISTICS: the frame is very simple to assemble. Once mounted and fixed to the two side profiles and to the floor, all other components of the structure can be adjusted both in height and width independently, allowing, in this way, to make the necessary adjustments to the sanitary and water and drainage pipes according to individual needs. The structure is fixed to the two uprights of the plasterboard by two side plates adjustable in width between 500 and 600 mm, while the attachment to floor is with two bases of support placed at the bottom of the uprights.
The uprights can be moved horizontally to obtain a minimum distance of 180 mm up to 340 mm.
The two support arms of the sanitary WC (threaded bars M12) can be adjusted in height on the uprights so as to adapt the height of the sanitary also in the case of floating floors. The bracket for the attachment of the discharge and discharge pipes, can be moved vertically independently, the upper part is fixed with the isophonic collar having 50 mm for the water supply pipe and, at the bottom, an isophonic collar for the 90 mm drain pipe (also adaptable to Ø110 mm).
USE: self-supporting frame suitable for all types of suspended WC thanks to the possibility of adjusting both the distance and the height of the WC and water supply pipes. It is installed on plasterboard, mixed, light and wooden walls.

CODICE	mm			€ Each
4930W	180÷340	400	1	251,39

N.B. the frame is supplied assembled.

493-01

15FICAR

SUPPORT FOR FLUSH TANKS

- Profile Material: DX51 - Z140 EN 10142
- Additional elements Material: DD11 EN 10111
- Electrolytic galvanizing UNI ISO 2081: 2018 thick. 6 to 9 [µm]

CHARACTERISTICS: Tubolar profile 30x15 th.1.5 mm equipped with two 120 mm horizontal holes, to allow the connection of the water drain tank at any point with the kit supplied (two M6 screws, two hexagonal nuts and two washers).
USE: The frame is the ideal support for fixing any toilet drain tank. The frame is fixed to the uprights for the construction of plasterboard walls and is adjustable in width from 500 to 600 mm. It can be used in combination with the self-supporting frame for suspended WC art. 493-WC.

CODICE	L [mm]		€ Each
49301	500÷600	1	52,47

N.B. the frame is supplied assembled.

Oteraccordi S.p.A. reserves the right to change the information contained in this catalogue without notice.

494-01

15FICAR

FRAME FOR TOILET FLOOR DRAIN PIPES

- Profile material: DX51 - Z140 EN 10142
- Material additional elements: DD11 EN 10111
- Electro-galvanization: UNI ISO 2081:2018 th. 6 ÷ 9 [µm]

CHARACTERISTICS: : frame to support both water supply and drain pipes. It is made of an isophonic clamp art.846 Ø 50-55 placed in the upper part for the fixing of the water supply pipe and an isophonic clamp art.843 Ø 90-93 in the lower part, for the drain pipe.
USE: the frame is the ideal support for fixing the supply and drain pipes for floor-mounted toilet with wall drain. Pipes positioning is adjustable to adapt to all types of sanitary ware TOILET on the market. The frame is fixed to the uprights for the construction of plasterboard walls.

CODICE	A [mm]	L [mm]		€ Each
49401	140÷180	500	1	**81,20**

N.B. the frame is supplied assembled.

494-02

15FICAR

FRAME FOR DRAIN AND SUPPLY WATER PIPES FOR BIDET AND WASHBASIN WALL DRAIN

- Profile material: DX51 - Z140 EN 10142
- Material additional elements: DD11 EN 10111
- Electro-galvanization: UNI ISO 2081:2018 th. 6 ÷ 9 [µm]

CHARACTERISTICS: frame for supporting the pipes of both the bidet fixed to the floor and the washbasins with wall drain. Its conformation allows the use of two brass extensions from ½" M/F art.529-O for hot and cold water supply pipes or with the possibility of use two connections to press. At the bottom of the support plate there is a nylon clamp 50 mm diameter for fixing the drain pipe.
USE: the frame is the ideal support for fixing pipes (supply and drain) for floor bidet and washbasins with wall drain. Pipes positioning is adjustable to adapt to all types of sanitary ware bidet and washbasin on the market . The frame is fixed to the uprights for the construction of plasterboard walls.

CODICE	L [mm]		€ Each
49402	500	1	**74,95**

N.B. the frame is supplied assembled.

Oteraccordi S.p.A. reserves the right to change the information contained in this catalogue without notice.

494-22

15FICAR

SUPPORT WATER DRAIN CONNECTION Ø50

- Profile Material: DX51 - Z140 EN 10142
- Additional elements Material: DD11 EN 10111
- Electrolytic galvanizing UNI ISO 2081: 2018 thick. 6 to 9 [µm]

CHARACTERISTICS: frame for supporting the water drain pipe. It consists of a quick collar in nylon Ø 50 mm connected to a tubular profile section 30x15x1,5.
USE: The frame is the ideal for supporting the water discharge pipe with Ø 50. The frame is fixed to the uprights for the realization of plasterboard pereti and is adjustable in width from 500 to 600 mm.

CODICE	L [mm]		€ Each
49422	500÷600	1	**84,44**

N.B. the frame is supplied assembled.

494-03

15FICAR

WATER SUPPLY PIPING FRAME FOR EXTERNAL SINK/BATHTUB

- Profile Material: DX51 - Z140 EN 10142
- Additional elements Material: DD11 EN 10111
- Electrolytic galvanizing UNI ISO 2081: 2018 thick. 6 to 9 [µm]

CHARACTERISTICS:frame designed for housing two 1/2" M/F brass fittings (art. 529-O) for hot and cold water supply pipes and with the possibility of housing two press connections. The traverse consists of a box-shaped tubular section 30x15x1,5. The frame is supplied assembled to facilitate installation by the installer.
USE: Solution designed for the installation of external mixers or boiler. The frame is fixed to the posts for the realization of plasterboard wall and is adjustable in width from 500 to 600 mm.

CODICE	L [mm]		€ Each
49403	500÷600	1	**89,12**

Oteraccordi S.p.A. reserves the right to change the information contained in this catalogue without notice.

494-04

15FICAR

Built-in shower mixer frame

- Profile Material: DX51 - Z140 EN 10142
- Additional elements Material: DD11 EN 10111
- Electrolytic galvanizing UNI ISO 2081: 2018 th. 6 ÷9 [µm]

CHARACTERISTICS: frame designed for the internal housing of the mixer block. The plate can be easily moved along the crossbar to allow the ideal positioning of the mixer. The traverse consists of a box-shaped tubular section 30x15x1,5. The frame is supplied assembled to facilitate installation by the installer.
USE: Solution designed for the installation of internal shower mixers. The frame is fixed to the uprights for the realization of plasterboard pereti and is adjustable in width from 500 to 600 mm.

CODICE	L [mm]		€ Each
49404	500÷600	1	**84,44**

494-05

15FICAR

Frame for shower head

- Profile Material: DX51 - Z140 EN 10142
- Additional elements Material: DD11 EN 10111
- Electrolytic galvanizing UNI ISO 2081: 2018 thick. 6 to 9 [µm]

CHARACTERISTICS:frame designed for housing both a 1/2" M/F brass fitting (art. 529-O) for the water supply pipe and a press fitting. The plate can be easily moved along the cross to allow the ideal positioning of the showerhead. The traverse consists of a box-shaped tubular section 30x15x1,5.
USE: Solution designed for the installation of the shower head. The frame is fixed to the uprights for the realization of plasterboard pereti and is adjustable in width from 500 to 600 mm.

CODICE	L [mm]		€ Each
49405	500÷600	1	**84,44**

N.B. the frame is supplied assembled.

Oteraccordi S.p.A. reserves the right to change the information contained in this catalogue without notice.

494-16

15FICAR

Built-in mixer frame for shower and faucet

- Profile Material: DX51 - Z140 EN 10142
- Additional elements Material: DD11 EN 10111
- Electrolytic galvanizing UNI ISO 2081: 2018 thick. 6 to 9 [µm]

Profile Material: DX51 - Z140 EN 10142
Additional elements Material: DD11 EN 10111
Electrolytic galvanizing UNI ISO 2081: 2018 thick. 6 to 9 [µm]

CODICE	L [mm]		€ Each
49416	500÷600	1	90,93

N.B. the frame is supplied assembled.

494-06

15FICAR

Washing machine and dishwasher kit frame

- Profile Material: DX51 - Z140 EN 10142
- Additional elements Material: DD11 EN 10111
- Electrolytic galvanizing UNI ISO 2081: 2018 thick. 6 to 9 [µm]

Profile Material: DX51 - Z140 EN 10142
Additional elements Material: DD11 EN 10111
Electrolytic galvanizing UNI ISO 2081: 2018 thick. 6 to 9 [µm]

CODICE	L [mm]		€ Each
49406	500÷600	1	89,01

N.B. the frame is supplied assembled.

Oteraccordi S.p.A. reserves the right to change the information contained in this catalogue without notice.

494-07

15FICAR

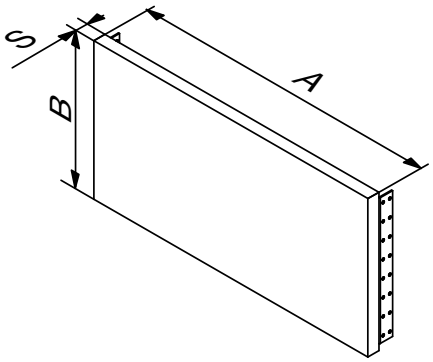

Universal reinforcement frame

- Material: DD11 EN 10111
- Electrolytic galvanizing UNI ISO 2081:2018 sp. 6 ÷ 9 [µm]
- Panel material: 20 mm thickness multilayer

CHARACTERISTICS: ideal solution to ensure an even stiffer support on plasterboard walls. Ideal support for fixing heavy elements, grab bars for the disabled, internal shower seats for the disabled etc.
USE: Ideal support for fixing boilers, wall boilers, towel warmers, grab bars for disabled, indoor seats shower for disabled, kitchen wall units, handrails and shelves, etc. Thanks to the wide area of use, it is possible to use this universal support for any type of installation. The frame is fixed to the uprights for the construction of drywall walls.

CODICE	A x B x S [mm]		€ Each
49411	500 x 250 x 20	1	78,98
49412	500 x 485 x 20	1	108,60

N.B. the frame is supplied assembled.

494-17

15FICAR

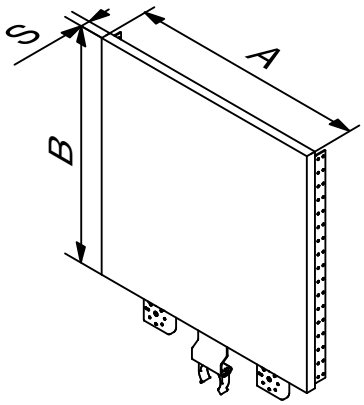

Wooden panel support for washbasin/urinal

- Material: DD11 EN 10111
- Electrolytic galvanizing UNI ISO 2081:2018 sp. 6 ÷ 9 [µm]
- Panel material: 20 mm thickness multilayer

CHARACTERISTICS: The 500x500 mm multi-layer panel provides an ideal base for attaching any model of sink, sink or sink and urinals, it is also an ideal support for ladder radiators. The fixing must be carried out with dowels or wooden screws. The frame is equipped with a quick-release nylon collar plate Ø 50 mm for the connection of the exhaust pipe, also adjustable in height and two support plates for hot and cold water supply pipes. The frame is supplied assembled and ready to use.
USE: ideal solution for fixing any type of washbasin when the model is ignored or for the support of urinals. The frame is fixed to the uprights for the construction of drywall walls.

CODICE	A x B x S [mm]		€ Each
49417	500 x 500 x 20	1	152,85

N.B. the frame is supplied assembled.

Oteraccordi S.p.A. reserves the right to change the information contained in this catalogue without notice.

494-10

15FICAR

Mixer holder for support 30x15

- Material: DD11 EN 10111
- Electrolytic galvanizing UNI ISO 2081:2018 sp. 6 ÷ 9 [µm]

CHARACTERISTICS: The component is fixed with a simple click to the basic profile consisting of a tubular box section 30x15x1,5 and can be moved and positioned at the desired point.
USE:it is used to support the shower mixer.

CODICE		€ Each
49410	1	18,36

494-14

15FICAR

Fitting holder with base for support 30x15

- Profile material: DD11 EN 10111
- Electrolytic galvanizing UNI ISO 2081: 2018 thick. 6 to 9 [µm]

CHARACTERISTICS: The component is fixed with a simple click to the basic profile consisting of a tubular box section 30x15x1,5 and can be moved and positioned at the desired point.
USE:it is used for fixing 1/2" brass fittings or press connections.

CODICE		€ Each
49414	1	18,36

Oteraccordi S.p.A. reserves the right to change the information contained in this catalogue without notice.

494-15

15FICAR

Holder for draining elbow Ø50 for supporto 30x15

- Material: DD11 EN 10111
- Electrolytic galvanizing UNI ISO 2081:2018 sp. 6 ÷ 9 [µm]

CHARACTERISTICS: Bracket equipped with a quick-release collar in nylon Ø 50 mm. With a simple click the support can be connected to the base profile consisting of a box tube 30x15x1,5 section and can be translated and positioned at the desired point.
USE: It is used to support any exhaust curve Ø 50 mm.

CODICE		€ Each
49415	1	15,74

494-18

15FICAR

Washing machine/dishwasher drain bracket for support 30x15

- Material: DD11 EN 10111
- Electrolytic galvanizing UNI ISO 2081:2018 sp. 6 ÷ 9 [µm]

CHARACTERISTICS: With a simple click the support can be connected to the base profile consisting of a box tube 30x15x1,5 section and can be translated and positioned at the desired point.
USE: it is used to support the drain trap of the washing machine or dishwasher.

CODICE		€ Each
49418	1	14,44

Oteraccordi S.p.A. reserves the right to change the information contained in this catalogue without notice.

495-CG

15FICAR

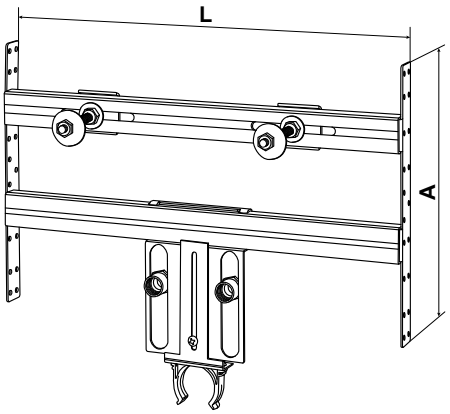

Wash basin support

- Pipe Material: Rectangular Iron Electrowelded 40x20x2 Galvanized Z000
- Side bracket material: DX51 galvanized Z100
- Additional element material: DD11 EN 10111:2008, electrolytic galvanizing UNI ISO 2081:2018 sp. 6 9 [µm]

CHARACTERISTICS: The self-supporting washbasin frame consists of two central profiles with rectangular section (sleepers) to obtain a robust and resistant to stress. It 'easy to install and wide adjustment to adapt to any type of sink. The M12 threaded support bars (arms) can in fact be adjusted inside slots 120 mm wide, to allow a great versatility and adaptability, making flexible the adjustment according to the distance between the washbasin. The box section of the two sleepers (40 mm x 20 mm x 2 mm thick) makes the structure highly resistant and usable even in modern walls without the tiles. The frame for the connection of the pipes is supplied with two 1/2" M/F brass fittings adjustable in height for the hot and cold water supply pipes and with the possibility of being able to fix, as an alternative, the fittings for the press connections. It is also supplied with a quick nylon collar Ø 50 mm for the connection of the exhaust pipe, also adjustable in height.
USE: self-supporting frame suitable for all types of suspended washbasins thanks to the possibility of adjusting both the installation distance of the washbasins and the water supply and drain pipes. It is installed on plasterboard walls, mixed, light and wooden.

CODICE	A [mm]	L [mm]				€ Each
495CG	310	500	150	1	40	**208,30**

N.B. the frame is supplied assembled.

Oteraccordi S.p.A. reserves the right to change the information contained in this catalogue without notice.

495-CG DS

15FICAR

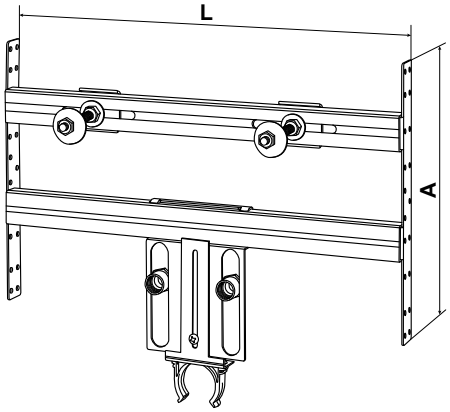

Wash basin support for DISABLED

- Pipe Material: Rectangular Iron Electrowelded 40x20x2 Galvanized Z000
- Side bracket material: DX51 galvanized Z100
- Additional element material: DD11 EN 10111:2008, electrolytic galvanizing UNI ISO 2081:2018 sp. 6 9 [µm]

CHARACTERISTICS: The self-supporting washbasin frame consists of two central profiles with rectangular section (crosspieces) to obtain a robust and resistant to stress. It is easy to install and wide adjustment to adapt to any type of washbasin for the disabled. The M12 threaded support bars (arms) can in fact be adjusted inside slots 170 mm wide, to allow a great versatility and adaptability making flexible the adjustment according to the distance between the washbasin. The box section of the two crossbars (40 mm x 20 mm x 2 mm thick) also makes the structure highly resistant and usable even in modern walls without the tiles. The frame for the connection of the pipes is supplied with two 1/2 M/F brass fittings adjustable in height for the hot and cold water supply pipes and with the possibility of being able to fix, as an alternative, the fittings for the press connections. It is also supplied with a quick nylon collar Ø50 mm for the connection of the exhaust pipe, also adjustable in height.
USE: self-supporting frame suitable for all types of suspended washbasins for disabled people, thanks to the possibility of adjusting both the installation distance of the washbasins and the pipes for water supply and drainage. It is installed on plasterboard mixed, light and wooden walls.

CODICE	A [mm]	L [mm]				€ Each
495CD	310	750	150	1	40	**229,84**

N.B. the frame is supplied assembled.

Oteraccordi S.p.A. reserves the right to change the information contained in this catalogue without notice.

5420-01

16ACFIS

Anchor for plasterboard

- Profile Material: DX51 - Z140 EN 10142
- Additional elements Material: DD11 EN 10111
- Electrolytic galvanizing UNI ISO 2081: 2018 thick. 6 to 9 [µm]

CHARACTERISTICS: vertical supports to increase the number of floor support. The frame is supplied assembled.
USE: recommended for applications with high loads, for fixing washbasins in schools, hotels, hospitals and places for disabled people.

CODICE	MxL	L [mm]	CG mm				€ Each
C4201	M6X45	12	5÷12	16	25	50	1,07
C4202	M6X60	12	5÷18	16	25	50	1,17
C4203	M6X74	12	18÷32	20	30	50	1,31

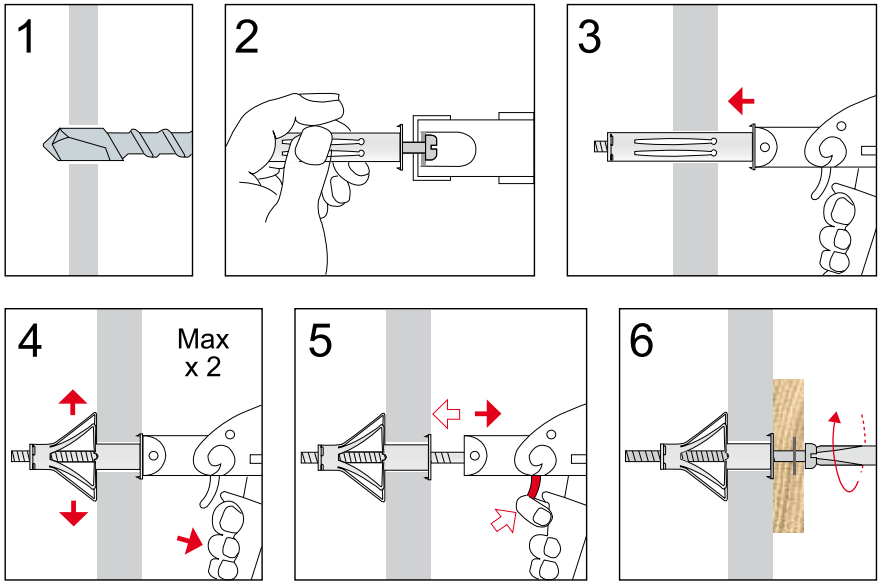

5420-01-TOOL

16ACFIS

Pliers for anchor

- Profile Material: DX51 - Z140 EN 10142
- Additional elements Material: DD11 EN 10111
- Electrolytic galvanizing UNI ISO 2081: 2018 thick. 6 to 9 [µm]

CHARACTERISTICS: vertical supports to increase the number of floor support. The frame is supplied assembled.
USE: recommended for applications with high loads, for fixing washbasins in schools, hotels, hospitals and places for disabled people.

CODICE		€ Each
C4200	1	65,56

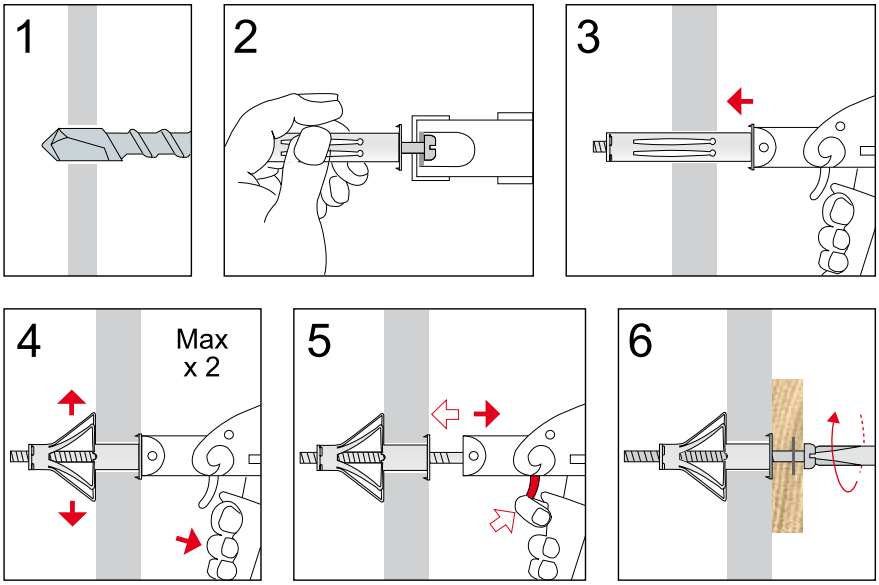

Oteraccordi S.p.A. reserves the right to change the information contained in this catalogue without notice.

note

note

RADIATOR
FIXING

OTER FIX

402-V

06MENRA

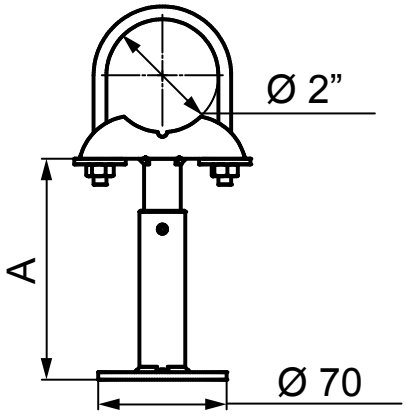

Painted floor support

- Material: DD11 EN10111
- Electrolytic galvanizing UNI ISO 2081:2018 th.6 ÷ 9 [µm]
- White powder painting RAL 9010 th. 70 ÷ 80 [µm]

CHARACTERISTICS: couple of galvanized and painted floor support for aluminum,cast iron and steel radiators, packaging complete of dowels and screws for floor fixing.
USE: for supporting floor radiators with possibility to adjust height.

CODICE	A [mm]		C		Couple
40201	110 ÷ 160	250	1	5	**65,52**

402-Z

06MENRA

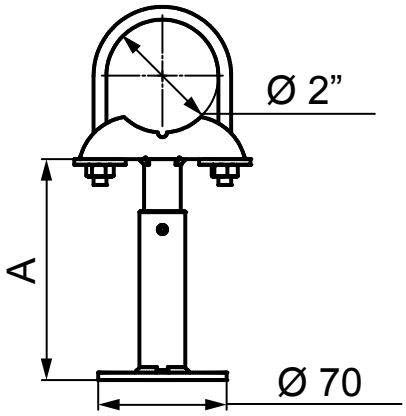

Galvanized floor support

- Material: DD11 EN10111
- Electrolytic galvanizing UNI ISO 2081:2018 th. 6 ÷ 9 [µm]

CHARACTERISTICS: couple of galvanized and painted floor support for aluminum,cast iron and steel radiators, packaging complete of dowels and screws for floor fixing.
USE: for supporting floor radiators with possibility to adjust height.

CODICE	A [mm]		C		Couple
40202	110 ÷ 160	250	1	5	**63,15**

Oteraccordi S.p.A. reserves the right to change the information contained in this catalogue without notice.

403-V

06MENRA

Painted Cover

- Material: DD11 EN 10111
- Electrolytic galvanizing UNI ISO 2081:2018 th. 6 ÷ 9 [µm]
- White powder painting RAL 9010 th. 70 ÷ 80 [µm]

USE: couple of galavanized and painted cover floor support to use together with art.402-V .

CODICE	C		Couple
40301	1	5	**38,36**

404-V

06MENRA

Painted wall bracket for cast iron radiators

- Material: S235JR EN 10025
- Electrolytic galvanizing UNI ISO 2081:2018 th. 6 ÷ 9 [µm]
- White powder painting RAL 9010 th. 70 ÷ 80 [µm]
- Polyethylene dowel

CHARACTERISTICS: couple of round wall brackets for fixing tubular cast iron radiators to the wall.

CODICE	mm	∅ [mm]		mm			C		Couple
40401	200	11,5	16x90	16	2/3	170	1	25	**6,32**
40402	230	11,5	16x90	16	3/4	91	1	25	**7,12**
40403	260	11,5	16x90	16	5/6	65	1	25	**8,48**

Oteraccordi S.p.A. reserves the right to change the information contained in this catalogue without notice.

404-Z

06MENRA

GALVANIZED WALL BRACKET FOR CAST IRON RADIATORS

- Material: S235JR EN 10025
- Electrolytic galvanizing UNI ISO 2081:2018 th. 6 ÷ 9 [µm]
- Polyethylene dowel

CHARACTERISTICS: couple of round wall brackets with dowels for fixing tubular cast iron radiators to the wall.

CODICE	mm	∅ [mm]		mm			C		Couple
40404	200	11,5	16x90	16	2/3	170	1	25	**5,44**
40405	230	11,5	16x90	16	3/4	91	1	25	**6,20**
40406	260	11,5	16x90	16	5/6	65	1	25	**8,22**

406-V

06MENRA

FLAT PLASTIC COATED BRACKET FOR TUBULAR RADIATORS Ø60

- Material: S235JR EN 10025
- Electrolytic galvanizing UNI ISO 2081:2018 th. 6 ÷ 9 [µm]
- Plastic Coated White RAL 9010 th. 70 ÷ 80 [µm]
- Polyethylene dowel

CHARACTERISTICS: couple of flat wall brackets complete of dowels for fixing ø 60 mm section tubular radiators to the wall.

CODICE	mm	∅ [mm]		mm			C		Couple
40601	175	8,5	12x80	12	2/3	57	1	25	**5,83**
40602	195	8,5	12x80	12	3/4	40	1	25	**6,06**
40603	250	8,5	12x80	12	5/6	23	1	25	**7,12**

Oteraccordi S.p.A. reserves the right to change the information contained in this catalogue without notice.

408-V

06MENRA

PAINTED BRACKET FOR TUBULAR RADIATORS Ø53

- Material: S235JR EN 10025
- Electrolytic galvanizing UNI ISO 2081:2018 th. 6 ÷ 9 [µm]
- White powder painting RAL 9010 th. 70 ÷ 80 [µm]
- Polyethylene dowel

CHARACTERISTICS: couple of round wall brackets complete of dowels for fixing ø 53 mm section tubular radiators to the wall.

CODICE	mm	∅ [mm]		mm			C		Couple
40801	200	8,5	12x80	12	2/3	35	1	25	**6,32**
40802	220	8,5	12x80	12	3/4	33	1	25	**6,47**
40803	270	11,5	16x90	16	5/6	65	1	25	**10,39**

410-V

06MENRA

PAINTED WALL BRACKET FOR TUBULAR RADIATORS Ø60

- Material: S235JR EN 10025
- Electrolytic galvanizing UNI ISO 2081:2018 th. 6 ÷ 9 [µm]
- White powder painting RAL 9010 th. 70 ÷ 80 [µm]
- Polyethylene dowel

CHARACTERISTICS: couple of round wall brackets complete of dowels for fixing ø 60 mm section tubular radiators to the wall.

CODICE	mm	∅ [mm]		mm			C		Couple
41001	200	8,5	12x80	12	2/3	35	1	25	**6,32**
41002	220	8,5	12x80	12	3/4	33	1	25	**6,47**
41003	270	11,5	16x90	16	5/6	65	1	25	**10,39**

Oteraccordi S.p.A. reserves the right to change the information contained in this catalogue without notice.

414-V

06MENRA

Plastic coated bracket for aluminum radiators

- Material: S235JR EN 10025
- Electrolytic galvanizing UNI ISO 2081:2018 th. 6 ÷ 9 [µm]
- Plastic coated white RAL 9010 th. 1 mm
- Polyethylene dowel

CHARACTERISTICS: couple of round wall brackets complete of dowels for fixing aluminum radiators to the wall.

CODICE	mm	∅ [mm]		mm		C		Couple
41401	170	7	10x80	10	34	1	50	**3,96**

414-V-S

06MENRA

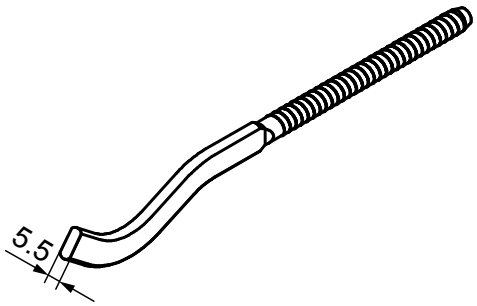

Plastic coated flat bracket for aluminum radiators

- Material: S235JR EN 10025
- Electrolytic galvanizing UNI ISO 2081:2018 th. 6 ÷ 9 [µm]
- Plastic coated white RAL 9010 th. 1 mm
- Polyethylene dowel

CHARACTERISTICS: couple of flat wall brackets complete of dowels for fixing aluminum radiators to the wall.

CODICE	mm	∅ [mm]		mm		C		Couple
41402	170	7	10x80	10	34	1	50	**4,14**

Oteraccordi S.p.A. reserves the right to change the information contained in this catalogue without notice.

414-Z

06MENRA

GALVANIZED BRACKET FOR ALUMINUM RADIATORS

- Material: S235JR EN 10025
- Electrolytic galvanizing UNI ISO 2081:2018 th. 6 ÷ 9 [μm]
- Polyethylene dowel

CHARACTERISTICS: couple of round wall brackets complete of dowels for fixing aluminum radiators to the wall.

CODICE	mm	∅ [mm]		mm		C		Couple
41403	170	7	10x80	10	34	1	50	**3,27**

414-Z-S

06MENRA

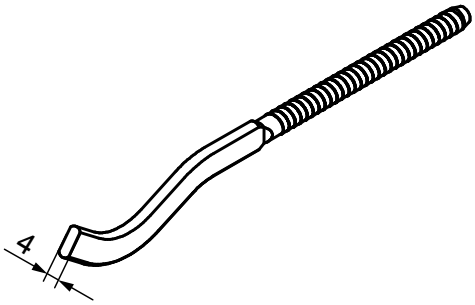

GALVANIZED FLAT BRACKET FOR ALUMINUM RADIATORS

- Material: S235JR EN 10025
- Electrolytic galvanizing UNI ISO 2081:2018 th. 6 ÷ 9 [μm]
- Polyethylene dowel

CHARACTERISTICS: couple of flat wall brackets complete of dowels for fixing aluminum radiators to the wall.

CODICE	mm	∅ [mm]		mm		C		Couple
41404	170	7	10x80	10	34	1	50	**3,43**

Oteraccordi S.p.A. reserves the right to change the information contained in this catalogue without notice.

415-V

06MENRA

PLASTIC COATED BRACKET FOR ALUMINUM RADIATORS

- Material: S235JR EN 10025
- Electrolytic galvanizing UNI ISO 2081:2018 th. 6 ÷ 9 [µm]
- Plastic coated white RAL 9010 th. 1 mm
- Polyethylene dowel

CHARACTERISTICS: couple of round wall brackets complete of dowels for fixing aluminum radiators to the wall.

CODICE	mm	∅ [mm]		mm		C		Couple
41501	170	8,5	12x80	12	58	1	50	**4,08**
41503	220	8,5	12x80	12	35	1	50	**5,58**

415-V-S

06MENRA

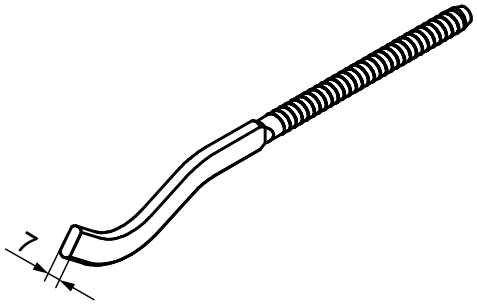

PLASTIC COATED FLAT BRACKET FOR ALUMINUM RADIATORS

- Material: S235JR EN 10025
- Electrolytic galvanizing UNI ISO 2081:2018 th. 6 ÷ 9 [µm]
- Plastic coated white RAL 9010 th. 1 mm
- Polyethylene dowel

CHARACTERISTICS: couple of flat wall brackets complete of dowels for fixing aluminum radiators to the wall.

CODICE	mm	∅ [mm]		mm		C		Couple
41502	170	8,5	12x80	12	58	1	50	**4,32**
41504	220	8,5	12x80	12	35	1	50	**5,74**

Oteraccordi S.p.A. reserves the right to change the information contained in this catalogue without notice.

415-Z

06MENRA

GALVANIZED BRACKET FOR ALUMINUM RADIATORS

- Material: S235JR EN 10025
- Electrolytic galvanizing UNI ISO 2081:2018 th. 6 ÷ 9 [μm]
- Polyethylene dowel

CHARACTERISTICS: couple of round wall brackets complete of dowels for fixing aluminum radiators to the wall.

CODICE	mm	∅ [mm]		mm		C		Couple
41505	170	8,5	12x80	12	58	1	50	**3,43**
41507	220	8,5	12x80	12	35	1	50	**4,95**

415-Z-S

06MENRA

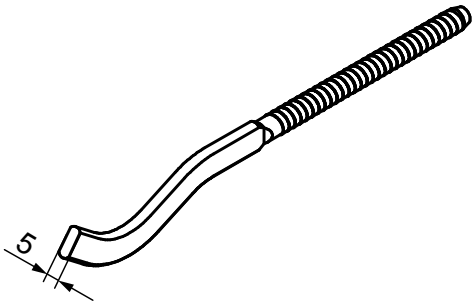

GALVANIZED FLAT BRACKET FOR ALUMINUM RADIATORS

- Material: S235JR EN 10025
- Electrolytic galvanizing UNI ISO 2081:2018 th. 6 ÷ 9 [μm]
- Polyethylene dowel

CHARACTERISTICS: couple of flat wall brackets complete of dowels for fixing aluminum radiators to the wall.

CODICE	mm	∅ [mm]		mm		C		Couple
41506	170	8,5	12x80	12	58	1	50	**3,72**
41508	220	8,5	12x80	12	35	1	50	**5,10**

Oteraccordi S.p.A. reserves the right to change the information contained in this catalogue without notice.

416-V

06MENRA

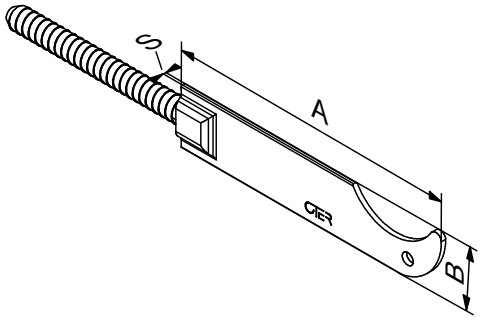

PAINTED BRACKET FOR ALUMINUM RADIATORS

- Material: S235JR EN 10025
- Electrolytic galvanizing UNI ISO 2081:2018 th. 6 ÷ 9 [µm]
- White powder painting RAL 9010 th. 70 ÷ 80 [µm]
- Polyethylene dowel

CHARACTERISTICS: couple of flat wall brackets complete of dowels for fixing aluminum radiators to the wall.

CODICE	mm	∅ [mm]	A x B x S [mm]		mm		C		Couple
41601	200	8,5	120 x 25 x 2	12x80	12	39	1	50	**6,06**

418

06MENRA

GALVANIZED BRACKET FOR LAMELLAR RADIATORS AND BOILERS

- Material: S235JR EN 10025
- Electrolytic galvanizing UNI ISO 2081:2018 th. 6 ÷ 9 [µm]
- Polyethylene dowel

CHARACTERISTICS: couple of round wall brackets complete of dowels for fixing lamellar radiators and /or boilers to the wall.

CODICE	mm	∅ [mm]		mm		C		Couple
41801	130	7	10x80	10	38	1	50	**4,64**

Oteraccordi S.p.A. reserves the right to change the information contained in this catalogue without notice.

418-P

06MENRA

GALVANIZED BRACKET FOR PLATE RADIATORS

- Material: S235JR EN 10025
- Electrolytic galvanizing UNI ISO 2081:2018 th. 6 ÷ 9 [µm]
- Polyethylene dowel

CHARACTERISTICS: couple of round wall brackets complete of dowels for fixing plate radiators to the wall.

CODICE	mm	∅ [mm]		mm		C		Couple
41802	130	7	10x80	10	38	1	50	**4,64**

501

06MENRA

GALVANIZED WALL BRACKET FOR CAST IRON AND STEEL RADIATORS

- Material: DX51 - Z140 EN 10142

CHARACTERISTICS: couple of wall brackets for cast iron and steel radiators with size 1"-1.1/4"

CODICE	mm	Ø	Width [mm]	mm		€ Each
50101	190	1" / 1.1/4"	9	1,5	100	**1,82**
50102	230	1" / 1.1/4"	9	1,5	100	**1,93**
50103	260	1" / 1.1/4"	9	1,5	100	**2,08**
50104	290	1" / 1.1/4"	9	1,5	100	**2,49**

Oteraccordi S.p.A. reserves the right to change the information contained in this catalogue without notice.

503

06MENRA

GALVANIZED WALL BRACKET FOR ALUMINUM RADIATORS

- Material: DX51 - Z140 EN 10142

CHARACTERISTICS: couple of wall brackets for aluminum radiators with size 1"-1.1/4"

CODICE	mm	Ø	mm		€ Each
50301	180	1" / 1.1/4"	2	100	**1,67**
50302	220	1" / 1.1/4"	2	100	**1,80**

Oteraccordi S.p.A. reserves the right to change the information contained in this catalogue without notice.

note

AIR CONDITION

FIXING

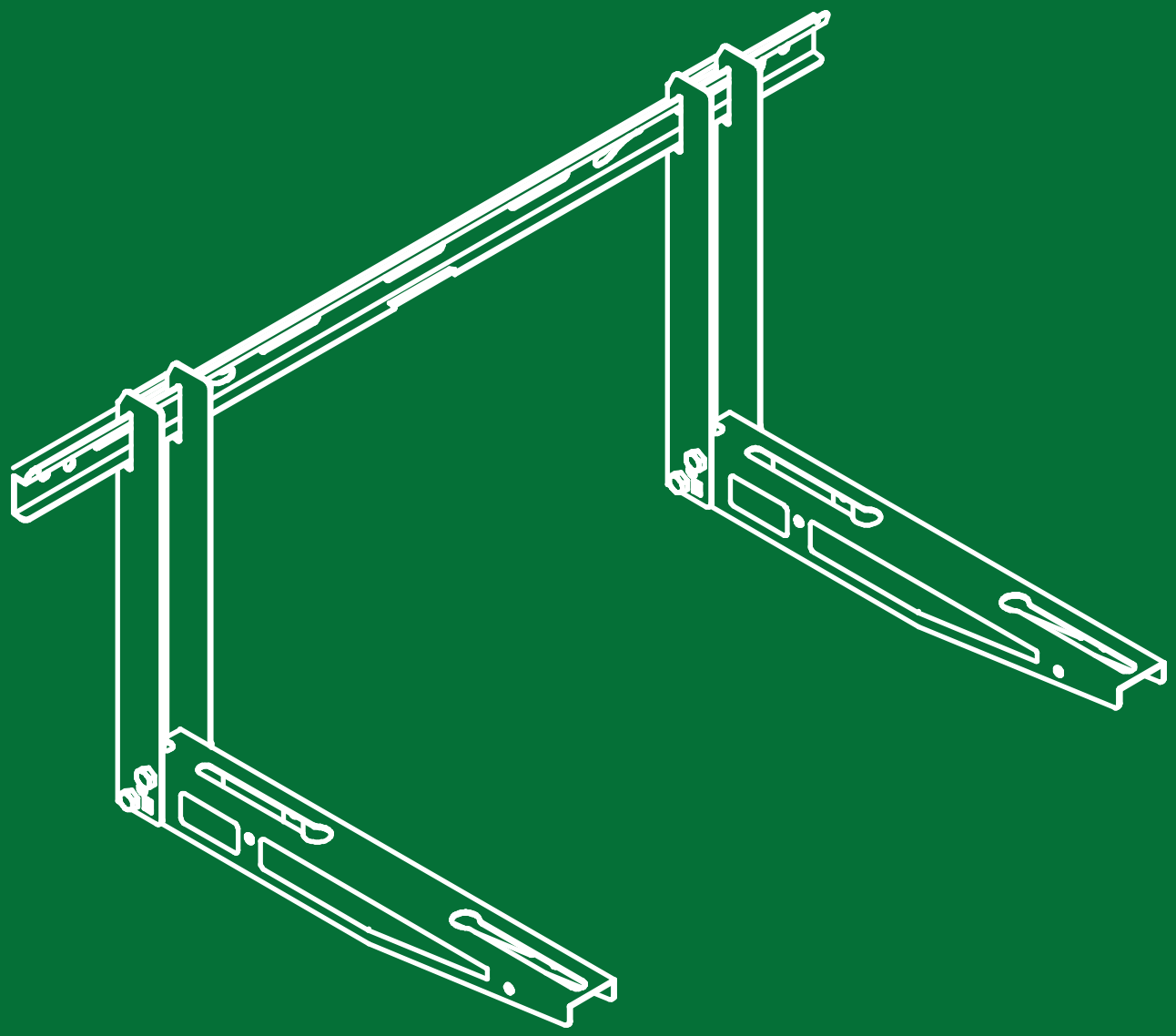

OTER FIX

959-V

09CONDI

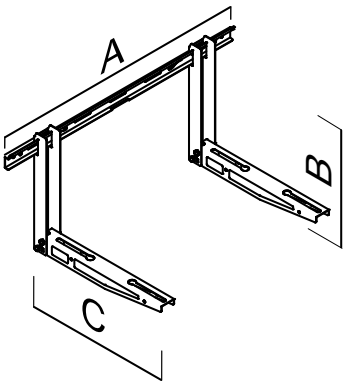

Brackets with guide

- Material: DX51 - Z140 EN 10142
- Powder painting polyester for outdoor RAL 9002 th.70 ÷100

CHARACTERISTICS: adjustable support arms, galvanized screws with self-locking nuts,anti-vibration and leveling elements. Rapid blocking system with the possibility of the two support arms control by sliding over the crossbar.
USE: used for the support of the wall condensing units.

CODICE	A x B x C [mm]	mm				€ Each
95901	800 x 400 x 420	15/10	120	1	150	**53,48**

960-V

09CONDI

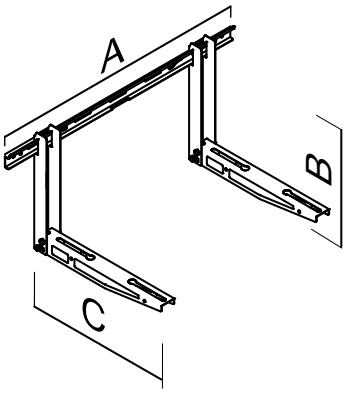

Brackets with guide

- Material: DX51 - Z140 EN 10142
- Powder painting polyester for outdoor RAL 9002 th.70 ÷100

CHARACTERISTICS: adjustable support arms, galvanized screws with self-locking nuts,anti-vibration and leveling elements. Rapid blocking system with the possibility of the two support arms control by sliding over the crossbar.
USE: used for the support of the wall condensing units.

CODICE	A x B x C [mm]	mm				€ Each
96001	800 x 400 x 420	15/10	160	1	117	**75,25**
96002	800 x 400 x 450	15/10	160	1	117	**79,60**

Oteraccordi S.p.A. reserves the right to change the information contained in this catalogue without notice.

961-V

09CONDI

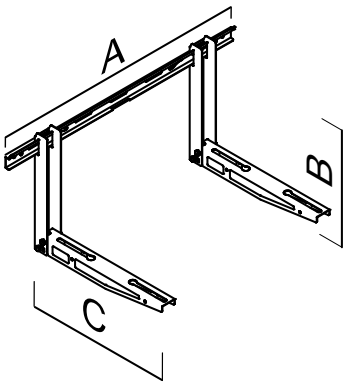

Brackets with guide

- Material: DX51 - Z140 EN 10142
- Powder painting polyester for outdoor RAL 9002 th.70 ÷100

CHARACTERISTICS: adjustable support arms, galvanized screws with self-locking nuts,anti-vibration and leveling elements. Rapid blocking system with the possibility of the two support arms control by sliding over the crossbar.
USE: used for the support of the wall condensing units.

CODICE	A x B x C [mm]	mm				€ Each
96101	1000 x 400 x 520	20/10	150+150	1	128	**100,74**
96102	1000 x 400 x 600	20/10	150+150	1	64	**128,10**

Oteraccordi S.p.A. reserves the right to change the information contained in this catalogue without notice.

note

note

FIXING

DOWELS

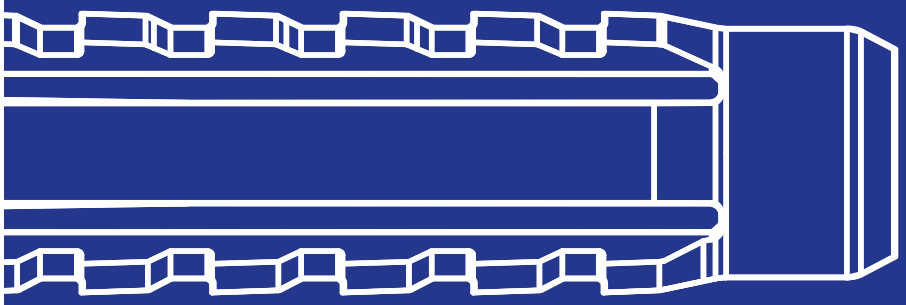

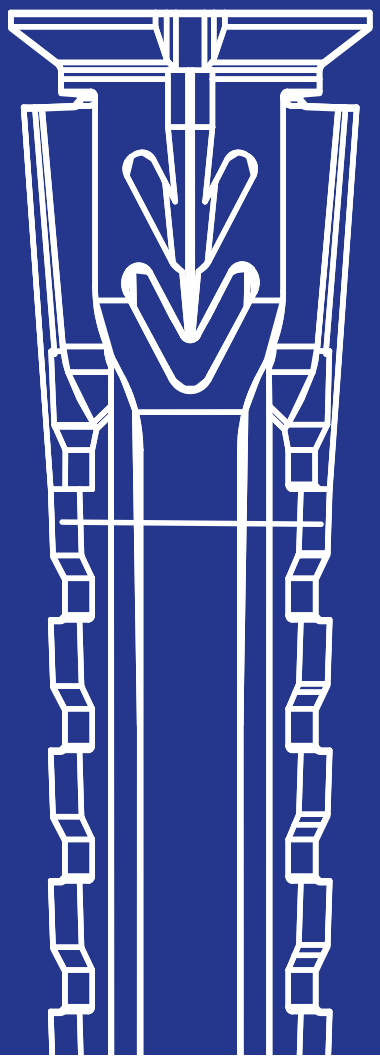

OTER FIX

LEGEND

concrete	
compact stone	
solid brick	
semi-solid brick	
forated brick	
cellular concrete (gasbeton)	
plasterboard	
wood	
cls alveolar	
partially indicated	✪
anchors sizing software	FIX CALC

5000

16ACFIS

STEEL ANCHOR

- Material: Steel sheet
- White galvanizing coating> 5 [uM] ISO 4042

CHARACTERISTICS: dowel with internal thread (female). Used for coupling with TE screws or threaded rods.
USE: ideal for anchoring. They can also be combined with hooks . Suitable for concrete, compact stone and solid brick.

CODICE	MxL	mm	Hole depth				€ Each
C0001	M6X50	12	60	200	210	50	1,83
C0002	M8X55	14	65	300	380	50	2,18
C0003	M10X65	16	80	400	600	25	3,32
C0004	M12X80	20	95	600	850	20	4,33

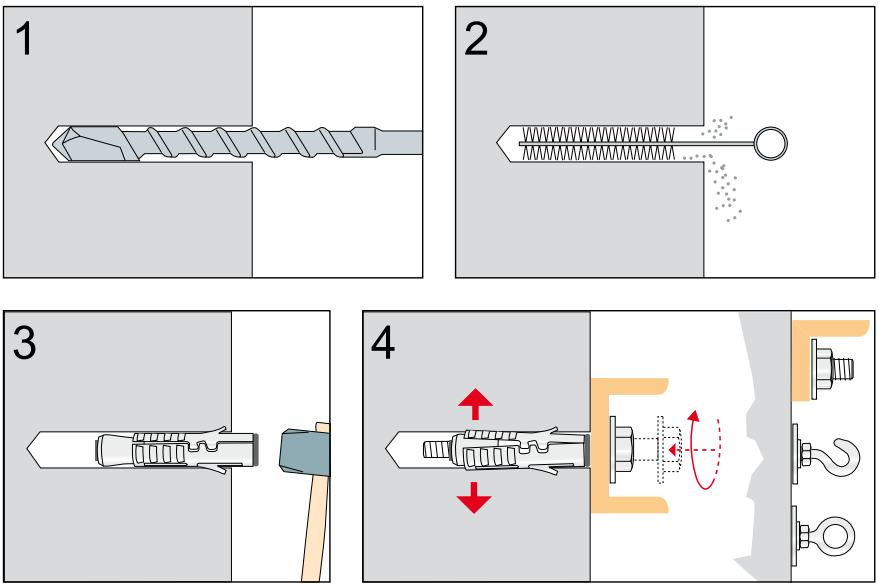

5000-01

16ACFIS

STEEL ANCHOR WITH TE SCREW

- Material:dowel in steel sheet , steel screw TE cl. 8.8 ISO 898/1, washer DIN 125/1
- White galvanizing coating > di 5 [µm] ISO 4042

CHARACTERISTICS:dowel complete with TE screw.
USE: suitable for a wide range of applications. Suitable for concrete, compact stone and solid brick.

CODICE	MxL	mm		T_{fix}	Nm				€ Each
C0011	M6X50	12	M6x60	10	10	200	210	50	**2,10**
C0012	M8X55	14	M8x70	10	24	300	380	50	**2,83**
C0013	M10X65	16	M12x100	20	45	400	600	25	**4,15**
C0014	M12X80	20	M16x100	20	75	600	850	20	**6,64**

5000-03

16ACFIS

STEEL ANCHOR WITH THREADED ROD

- Material: steel sheet dowel, threaded rod steel cl. 5.8, washers DIN 125/1, DIN NUT 934 cl.8
- White galvanizing coating> 5 [uM] ISO 4042 "

CHARACTERISTICS: dowel complete of threaded rod, washer and nut.
USE: suitable for a wide range of applications. (Fastening of plates, profiles, collars, anchoring,...). Suitable for concrete, compact stone and solid brick.

CODICE		MxL	mm	T_{fix}	Nm				€ Each
C0031	M6x65	M6X50	12	20	6	200	210	50	**2,83**
C0032	M8x75	M8X55	14	20	15	300	380	50	**3,49**
C0033	M10x95	M10X65	16	30	30	400	600	25	**4,97**
C0034	M12x115	M12X80	20	30	50	600	850	20	**6,99**

Oteraccordi S.p.A. reserves the right to change the information contained in this catalogue without notice.

5030

16ACFIS

STEEL HEAVY ANCHOR CE

- Material: Steel pin cl. 5.8 min, steel clamp, DIN nut 934 cl. 8, washer DIN 125/1
- White galvanizing coating> 5 [uM] ISO 4042 "

CHARACTERISTICS: threaded dowel body with nut and washer, used for heavy anchors. You can use the hammer without causing any damage to the thread. conforming to ETA 01/0014 - opt. 7 (non-cracked concrete).
USE: The thread allows applications with variable installation depths. Same diameter between dowel, hole and thread. Suitable for concrete and compact stone.

CODICE	MxL	mm	T_{fix}	Depth installa-tion [mm]				€ Each
C0301	M8X75	8	15	48	360	430	50	1,54
C0302	M8X90	8	30	48	360	430	50	1,61
C0303	M10X75	10	5	59	480	700	50	1,94
C0304	M10X90	10	20	59	480	700	50	2,00
C0305	M10X120	10	50	59	480	700	50	2,96
C0306	M12X100	12	10	71	950	880	50	2,29
C0307	M12X160	12	70	71	950	880	50	4,66
C0308	M16X110	16	15	96	1670	2010	50	5,99

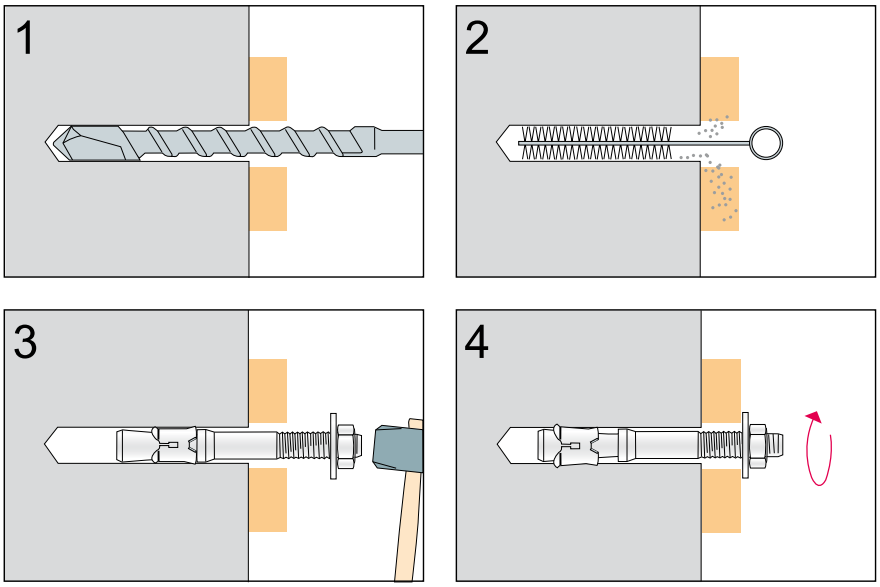

5030-I

16ACFIS

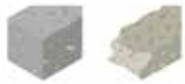

ETA 01/0009 - op. 7

STAINLESS STEEL AISI 316 HEAVY ANCHOR

- Material: AISI 316 stainless steel pin (A4 70), stainless steel clamp AISI 316 (A4)
- DIN nut 934 A4 70 (min.), Washer 125/1 DIN A4.

CHARACTERISTICS: threaded dowel body with nut and washer, used for heavy anchors. You can use the hammer without causing any damage to the thread. conforming to ETA 01/0009 - opt. 7 (non-cracked concrete). Dowel AISI 316 (Stainless steel A4).
USE: The trhread allows applications with variable installation depths. Same diameter between dowel, hole and thread. Suitable for concrete and compact stone.

CODICE	MxL	mm	T_{fix}	Depth installation [mm]				€ Each
C0311	M8X75	8	15	48	360	430	100	**4,07**
C0312	M8X90	8	30	48	360	640	100	**4,27**
C0313	M10X75	10	5	59	570	1010	50	**5,81**
C0314	M10x90	10	20	59	570	1010	50	**6,22**
C0315	M10x120	10	50	59	570	1010	50	**7,59**
C0316	M12X100	12	10	71	1110	1480	50	**9,29**
C0317	M12X160	12	70	71	1110	1480	25	**11,86**
C0318	M16x110	16	15	76	1670	2750	25	**18,48**

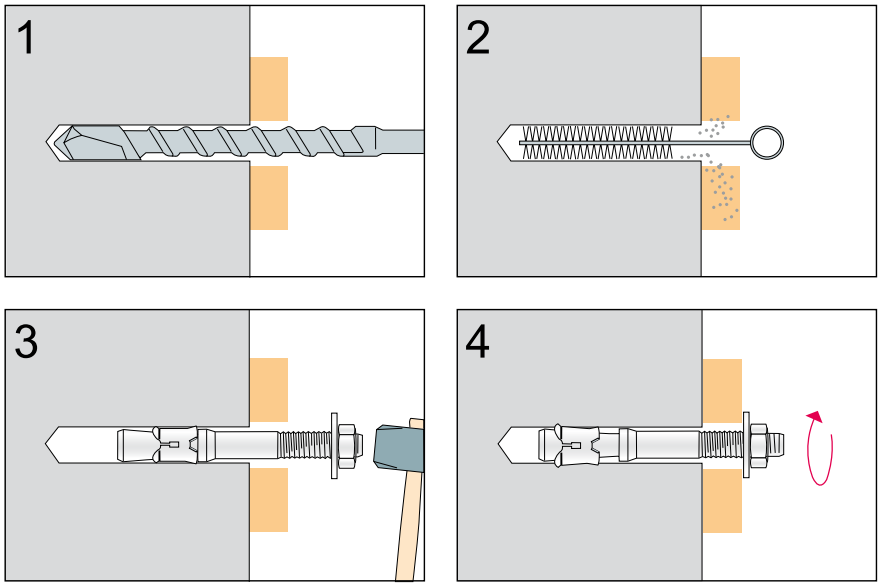

Oteraccordi S.p.A. reserves the right to change the information contained in this catalogue without notice.

5040

16ACFIS

STEEL DROP ANCHOR

- Material: Steel Q 195
- White galvanizing coating > 5 [µm] ISO 4042

CHARACTERISTICS: anchor to combine with TE threaded rods or screws. When the punch pushes the conical expansion plug, the anchor body expands against the walls of the hole. The dowel requires little depth of hole and it's ideal for concrete and compact stone.
USE: ideal for suspension systems of pipes, ventilation ducts, sprinkler systems and anchors "

CODICE	MxL	mm	Hole depth	Nm				€ Each
C0401	M6X25	8	25	4	170	200/320(*)	100	**0,39**
C0402	M8X30	10	30	8	270	370/590(*)	100	**0,51**
C0403	M10X40	12	40	15	350	580/930(*)	100	**0,67**
C0404	M12X50	15	50	35	450	840/1350(*)	50	**1,21**

(*) with screw cl. 5.6 / with screw cl. 8.8

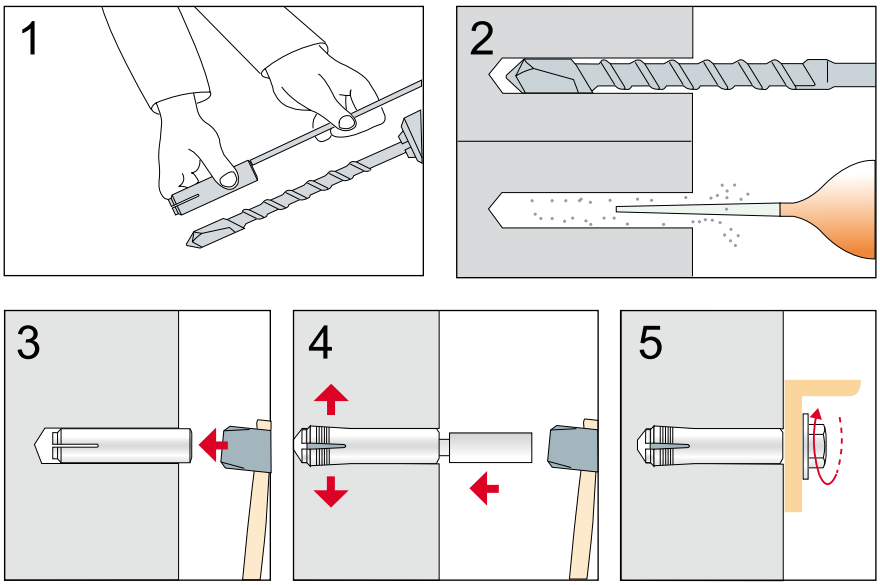

5040-01

16ACFIS

PUNCH FOR DROP ANCHOR

• Material: cold re-rolled Steel C40 and electrolitic galvanizing th.5 ÷ 7 [µm]

USE: indicated for the installation of the dowels art. 5040. Choose the punch according to the diameter of the dowel.

CODICE	For dowel		€ Each
C0411	M6	1	18,33
C0412	M8	1	21,36
C0413	M10	1	21,64
C0414	M12	1	24,17

Oteraccordi S.p.A. reserves the right to change the information contained in this catalogue without notice.

5120

16ACFIS

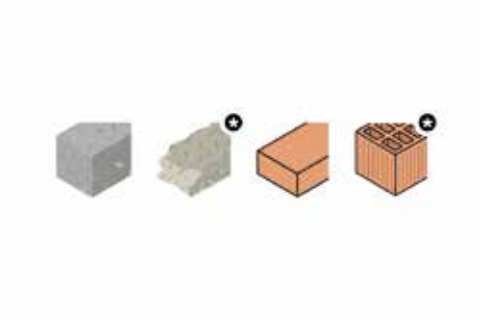

TER SCREW FOR CONCRETE WITH CE CERTIFICATION OPTION 1

- Material: steel TER screw
- cl.10.9
- White galvanizing coating > di 5 [µm] ISO 4042

CHARACTERISTICS: screw with integrated washer and hex head . All along its length has a thread that allows a reduction of the tightening torque. It is laid directly without dowel . With CE certification, conforming to 'ETAG 001 - opt. 1 (cracked concrete) and resistance to fire certification F120 (according to TR 020).
USE: Its particular shape allows to unscrew the screw and re-use. Ideal on concrete, solid brick and compact stone and half-full brick . "

CODICE	mm	ØxL [mm]	Depth installation [mm]				€ Each
C1201	8	Ø10x60	45/50/-(*)	240/240/480(**)	800	100	2,33
C1202	8	Ø10x100	45/50/65(*)	240/240/480(**)	800	100	3,49
C1203	8	Ø10x130	45/50/65(*)	240/240/480(**)	800	100	5,34
C1204	10	Ø12x60	50/-/-(*)	240/360/630	1200	100	3,67
C1205	10	Ø12x150	50/60/75(*)	240/360/630(**)	1200	100	9,02

(*) possible anchorage depth - (**) tensile load according to anchorage depth

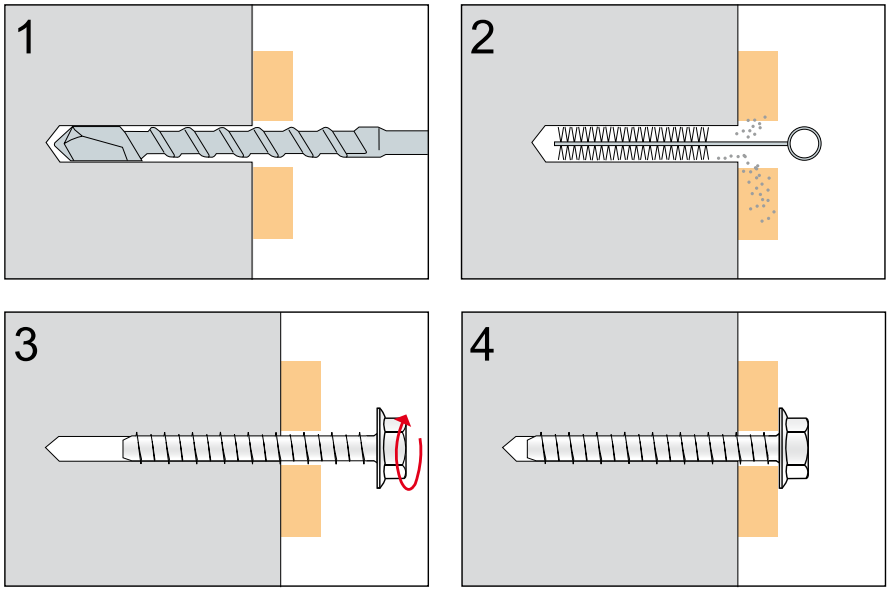

5120-01

16ACFIS

Removable Concrete Screw M8/M10

• Material: Galvanized Steel

CHARACTERISTICS: Fully removable screw suitable for temporary fixings. Reusable several times, thanks to the special cutting edges that carve in depth, concrete. Maximum loading and reduced distances from the edge and between the anchors. Friction reduced during tightening and maximum productivity, especially with pulse screwdriver for installations in seismic zone C1.
USE: Ideal for slopes, fire protection systems, ventilation systems, ducts and suspended ceilings. It can also be combined with a hook or an eyelet. Suitable for cracked and non-cracked concrete with strength class C12/15 to C50/60 for multiple non-structural fixings, compact natural stone and cellular floors.

CODICE	MxL	mm	h nom [mm]	H top [mm]	Hole depth	Nm		€ Each
C1206	M6X35	6	35	37	45	<=10 Nm	50	**4,91**
C1207	M6X55	6	55	37	65	<=10 Nm	50	**4,97**

SCHEDA TECNICA 5120-01

CARICHI AMMISSIBILI PER UN SINGOLO TASSELLO IN APPLICAZIONI RIDONDANTI NON STRUTTURALI IN CALCESTRUZZO C20/25[2)]

				calcestruzzo fessurato				calcestruzzo non fessurato			
Ø X L	profondità di posa ridotta	Profondità di posa standard [mm]	Spessore min. materiale base [mm]	N_{cons}	V_{cons}	S_{min} [1)]	C_{min} [1)]	N_{cons}	V_{cons}	S_{min} [1)]	C_{min} [1)]
6 x 35	27	–	80	60	240	35	35	60	240	35	35
6 x 55	–	44	100	360	330	40	40	360	330	40	40

[1)] E' possibile utilizzare interassi e distanze dal bordo minimi solo riducendo il carico consigliato.

[2)] Per calcestruzzi di classe superiore (fino a C50/60) è possibile incrementare i carichi consigliati.

CARICHI AMMISSIBILI PER UN SINGOLO TASSELLO[1)] IN SOLAI ALVEOLARI IN CLS PRECOMPRESSO C30/37[2)]

Spessore della cartella	d_b	[mm]	≥ 25	≥ 30	≥ 35
Profondità di avvitamento	h_{nom}	[mm]	35	35	35
Coppia di serraggio	T_{inst}	[Nm]	≤ 10	≤ 10	≤ 10
Carico ammissibile[3)]	F_{cons}	[Kg]	40	80	120
Interasse minimo	s_1, s_2 [4)]	[mm]	100	100	100
Distanza minima dal bordo	c_1, c_2 [4)]	[mm]	100	100	100

[1)] Nel calcolo dei carichi ammissibili sono stati considerati i coefficienti parziali di sicurezza per la resistenza dei materiale, come indicato nel benestare, ed il coefficiente parziale di sicurezza per le azioni Y_L=1,4.

[2)] Per calcestruzzi con classe di resistenza da C30/37 a C50/60.

[3)] Valido per le azioni di trazione, di taglio e oblique con qualsiasi inclinazione.

[4)] Valori minimi degli interassi e delle distanze dal bordo. Per ulteriori misure consultare il benestare.

Oteraccordi S.p.A. reserves the right to change the information contained in this catalogue without notice.

5200

16ACFIS

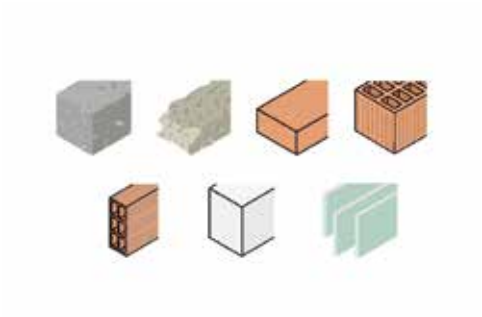

EXPANSION ANCHOR

• Material: nylon dowel Pa6

CHARACTERISTICS:universal dowel for all basic materials (concrete, half-full brick, block Poroton drilled, drilled Leca block, plasterboard, compact stone, solid brick, perforated brick, hollow concrete block and cellular concrete).
USE: it can 'be used with every screw. The low tightening torque also allows an easy screwing by hand. Its dynamic geometry makes it ideal for tiled walls. Its maxi anti-rotation flaps ensure a differentiated expansion.

CODICE		mm	Hole depth	Depth installation [mm]		€ Each
C2001	5x25	5	35	25	100	**0,10**
C2002	6x30	6	40	30	100	**0,10**
C2003	8x40	8	50	40	100	**0,16**
C2004	10x50	10	60	50	100	**0,23**
C2005	12x60	12	70	60	100	**0,35**

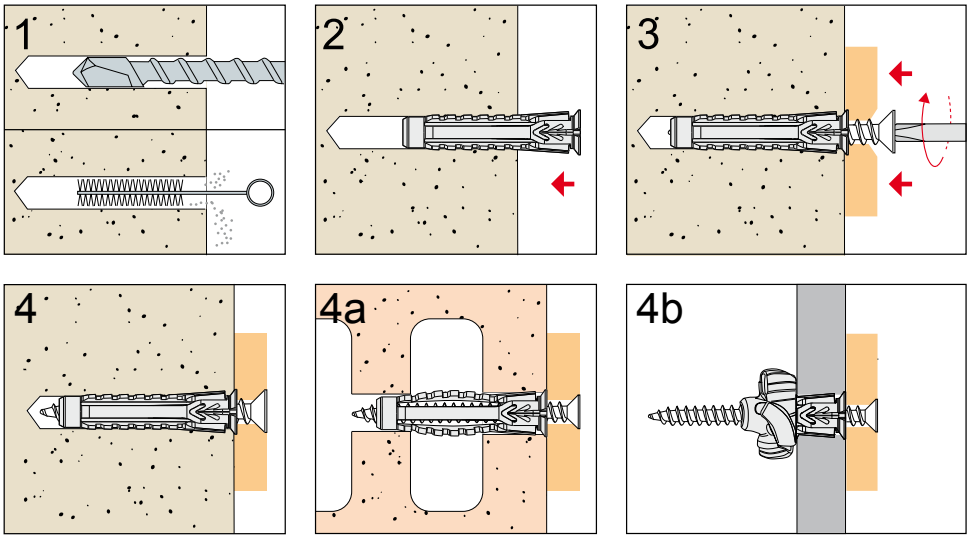

5201

16ACFIS

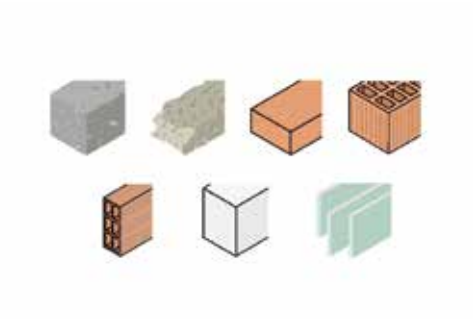

Expansion anchor with TPS screw

• Material: nylon dowel Pa6, screw in hardened steel with white • galvanizing coating

CHARACTERISTICS:universal dowel for all basic materials (concrete, half-full brick, block Poroton drilled, drilled Leca block, plasterboard, compact stone, solid brick, perforated brick, hollow concrete block and cellular concrete).
USE: it can 'be used with every screw. The low tightening torque also allows an easy screwing by hand. Its dynamic geometry makes it ideal for tiled walls. Its maxi anti-rotation flaps ensure a differentiated expansion.

CODICE	MxL	mm		T_{fix}		€ Each
C2101	M5X25	5	4X30	1,5	100	**0,16**
C2102	M6X30	6	4,5X40	5	100	**0,18**
C2103	M8X40	8	5X50	5	50	**0,30**
C2104	M10X50	10	6X60	5	50	**0,55**

SCHEDA TECNICA 5201

Tassello in nylon con vite TPS truciolare pozidrive

Ø X L	Vite Ø X L	N_{cons}	V_{cons}	N_{cons}	V_{cons}	N_{cons}	V_{cons}	N_{cons}	V_{cons}	N_{cons}	V_{cons}	N_{cons}	V_{cons}	c [mm]	s [mm]
		[Kg] cls		[Kg] mattone pieno		[Kg] mattone forato		[Kg] bimattone doppio UNI		[Kg] cartongesso 12,5 mm		[Kg] calcestruzzo cellulare		distanza bordo	interasse
5x25	4x30	23	30	25	30	11	14	16	20	4	7	8	10	45	40
6x30	4,5x40	18	25	22	25	15	20	18	25	5	7	6	10	55	55
8x40	5x50	35	50	26	35	21	25	21	25	8	10	15	20	70	60
10x50	6x60	50	70	60	80	30	40	30	40	10	12	25	30	90	75

N_{cons} = Carico consigliato di trazione
V_{cons} = Carico consigliato di taglio
C = Distanza dal bordo del materiale base
S = Interasse tra i tasselli

Oteraccordi S.p.A. reserves the right to change the information contained in this catalogue without notice.

5202

16ACFIS

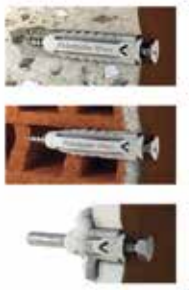

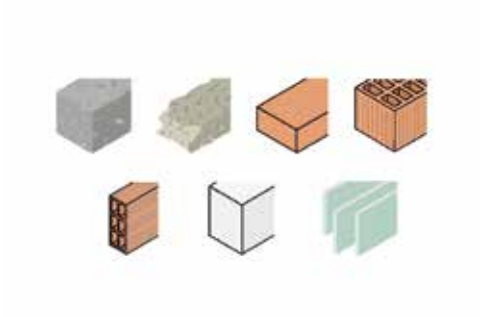

EXPANSION ANCHOR WITH TER SCREW

• Materiale: nylon dowel Pa6, TER wood screw 5.6 steel with white • galvanized coating

CHARACTERISTICS:universal dowel for all basic materials (concrete, half-full brick, block Poroton drilled, drilled Leca block, plasterboard, compact stone, solid brick, perforated brick, hollow concrete block and cellular concrete).
USE: it can 'be used with every screw. The low tightening torque also allows an easy screwing by hand. Its dynamic geometry makes it ideal for tiled walls. Its maxi anti-rotation flaps ensure a differentiated expansion.

CODICE		mm		T_{fix}		€ Each
C2201	8X40	8	6x50	5	100	**0,78**
C2202	10x50	10	6x60	5	100	**1,04**
C2203	12X60	12	8x70	5	50	**1,85**

SCHEDA TECNICA 5202

Tassello in nylon con vite TER legno con rondella integrata

Ø X L	Vite Ø X L	N_{cons}	V_{cons}	N_{cons}	V_{cons}	N_{cons}	V_{cons}	N_{cons}	V_{cons}	N_{cons}	V_{cons}	N_{cons}	V_{cons}	c [mm]	s [mm]
		[Kg] cls		[Kg] mattone pieno		[Kg] mattone forato		[Kg] bimattone doppio UNI		[Kg] cartongesso 12,5 mm		[Kg] calcestruzzo cellulare		distanza bordo	interasse
8x40	6x50	60	80	70	90	40	45	50	60	8	10	19	23	70	60
10x50	6x60	62	75	80	100	40	45	42	60	10	12	25	30	90	75
12x60	8x70	82	110	90	110	46	80	40	60	10	12	35	50	110	90

N_{cons} = Carico consigliato di trazione
V_{cons} = Carico consigliato di taglio
C = Distanza dal bordo del materiale base
S = Interasse tra i tasselli

Oteraccordi S.p.A. reserves the right to change the information contained in this catalogue without notice.

5203

16ACFIS

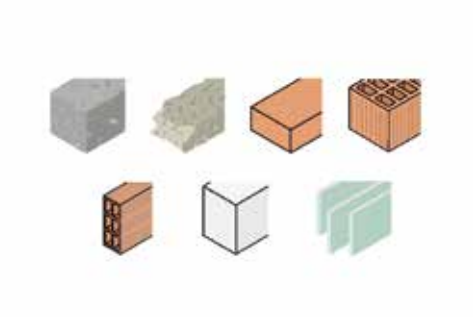

Expansion anchor with TE screw

• Material: nylon plug Pa6, metric screw steel 4.8 with white • galvanizing coating

CHARACTERISTICS:universal dowel for all basic materials (concrete, half-full brick, block Poroton drilled, drilled Leca block, plasterboard, compact stone, solid brick, perforated brick, hollow concrete block and cellular concrete).
USE: it can 'be used with every screw. The low tightening torque also allows an easy screwing by hand. Its dynamic geometry makes it ideal for tiled walls. Its maxi anti-rotation flaps ensure a differentiated expansion.

CODICE		mm		Ø rondella	T_{fix}		€ Each
C2301	8X40	8	M5X50	5,3x10	5	50	**0,39**
C2302	10X50	10	M6X60	6,4x10	5	25	**0,59**
C2303	12X60	12	M8X70	8,4x16	5	25	**1,06**
C2304	14X70	14	M10X80	10,5x20	5	25	**1,85**

SCHEDA TECNICA 5203

Tassello in nylon con vite metrica e rondella

Ø X L	Barra Ø X L	N_{cons}	V_{cons}	N_{cons}	V_{cons}	N_{cons}	V_{cons}	N_{cons}	V_{cons}	N_{cons}	V_{cons}	N_{cons}	V_{cons}	c [mm]	s [mm]
		[Kg] cls		[Kg] mattone pieno		[Kg] mattone forato		[Kg] bimattone doppio UNI		[Kg] cartongesso 12,5 mm		[Kg] calcestruzzo cellulare		distanza bordo	interasse
8x40	M5x50	25	30	35	40	30	35	30	35	8	10	18	22	70	60
10x50	M6x60	55	65	70	80	42	50	42	50	10	10	28	32	90	75
12x60	M8x70	68	110	92	110	50	80	42	60	11	12	38	50	110	90
14x70	M10x80	122	140	125	140	60	100	56	70	11	13	44	60	130	110

N_{cons} = Carico consigliato di trazione
V_{cons} = Carico consigliato di taglio
C = Distanza dal bordo del materiale base
S = Interasse tra i tasselli

Oteraccordi S.p.A. reserves the right to change the information contained in this catalogue without notice.

5204-L

16ACFIS

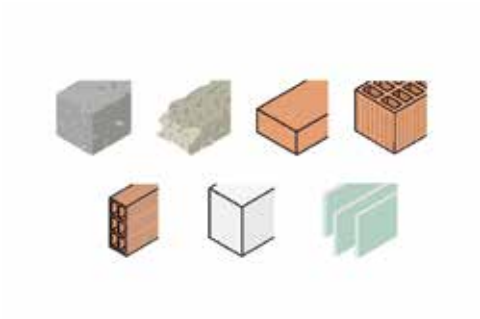

UNIVERSAL NYLON DOWEL - INCREASED LENGTH

• Material: nylon dowel Pa6

CHARACTERISTICS: universal dowel for all basic materials (concrete, semi-solid brick, Poroton perforated block, Leca perforated block, plasterboard, compact stone, solid brick, perforated brick, perforated block in cement and cellular concrete). Its universality makes it suitable for housing pins with wood thread and bars with metric thread. With the latter the performance is optimal.
USE: can be used with each screw. The low clamping torque allows a very easy screwing even by hand. The flexible edge allows both through and through use. Its dynamic geometry makes it ideal for tiled walls. Its maxi anti-rotation fins ensure a differentiated expansion.

CODICE	mm	ØxL [mm]	Hole depth		€ Each
C2401	6	6x50	60	100	0,25
C2402	8	8x60	70	100	0,38
C2403	10	10x70	80	100	0,61

(*) CURLING/KNOT GUARANTEED ALSO ON DOUBLE PLASTERBOARD PLATE

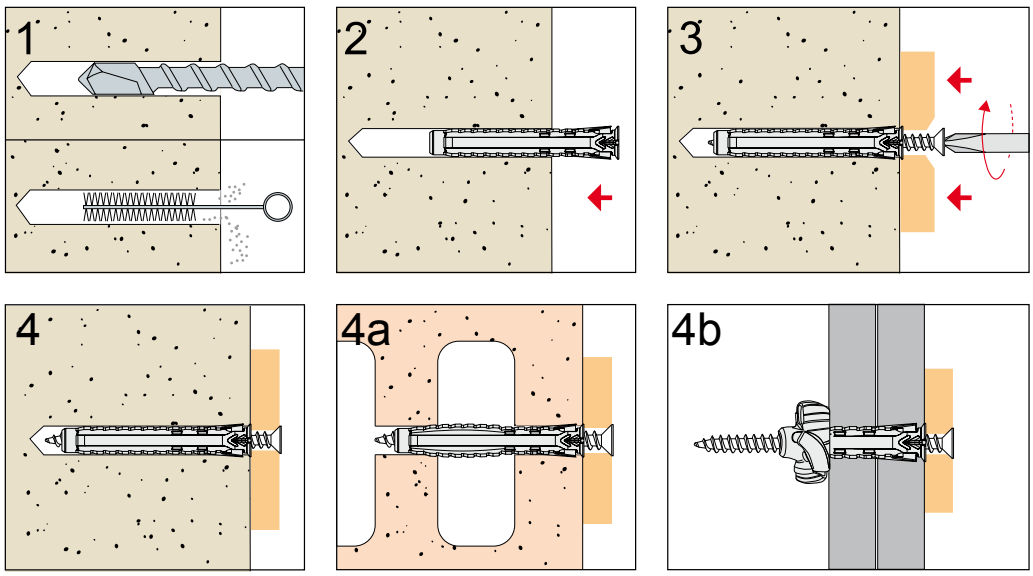

5205-L

16ACFIS

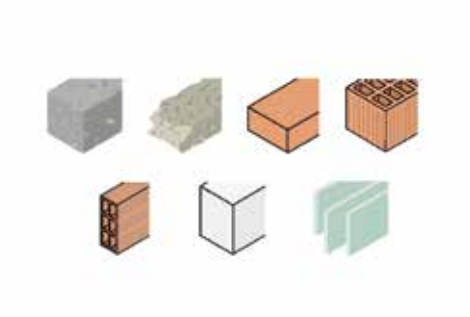

UNIVERSAL NYLON DOWEL WITH TPS SCREW- INCREASED LENGTH

• Material: nylon dowel Pa6 , cemented steel chipboard with white • zinc coating

CHARACTERISTICS: universal dowel for all basic materials (concrete, semi-solid brick, Poroton perforated block, Leca perforated block, plasterboard, compact stone, solid brick, perforated brick, perforated block in cement and cellular concrete). The tensile and shear load varies depending on the base material in which the dowel is laid.
USE: The low clamping torque allows a very easy screwing even by hand. The flexible edge allows a use both through and through. Its dynamic geometry makes it ideal for tiled walls. Its maxi anti-rotation fins ensure a differentiated expansion.

CODICE	mm	ØxL [mm]		Hole depth		€ Each
C2501	6	6x50	4,5X60	60	100	**0,43**
C2502	8	8x60	5X70	70	100	**0,66**
C2503	10	10x70	6X80	80	100	**1,14**

(*) CURLING/KNOT GUARANTEED ALSO ON DOUBLE PLASTERBOARD PLATE

SCHEDA TECNICA 5205-L

Tassello in nylon con vite TPS truciolare phillips

CARICHI RACCOMANDATI(1)

Ø X L	Vite Ø X L	$N_{cons[Kg]}$	$V_{cons[Kg]}$	$N_{cons[Kg]}$	$V_{cons[Kg]}$	$N_{cons[Kg]}$	$V_{cons[Kg]}$	$N_{cons[Kg]}$	$V_{cons[Kg]}$	$N_{cons[Kg]}$	$V_{cons[Kg]}$	$N_{cons[Kg]}$	$V_{cons[Kg]}$	$N_{cons[Kg]}$	$V_{cons[Kg]}$	c [mm]	s [mm]
		cls C20/25(2)		mattone pieno (2)		mattone forato (3)		bimattone doppio UNI (3)		Cartongesso lastra singola 12,5 mm		Cartongesso doppia lastra 12,5 mm x 2		Cls cellulare (2)		distanza dal bordo (4)	interasse (4)
6x50	4,5x60	40	42	32	35	16	22	18	22	5	7	11	13	18	14	85	85
8x60	5x70	45	61	42	50	23	28	23	28	8	10	13	20	24	28		
10x70	6x80	76	100	70	98	30	36	30	38	10	12	17	25	37	42		

N_{cons} = Carico consigliato di trazione
V_{cons} = Carico consigliato di taglio
C = Distanza dal bordo del materiale base
S = Interasse tra i tasselli
(1) I carichi ammissibili derivano dai carichi medi di rottura e cono comprensivi del coefficiente di sicurezza totale Y = 6.
(2) Supporti senza intonaco.
(3) Supporti con presenza di intonaco di spessore circa 10 ÷ 15 mm.
(4) Dati indicativi; in caso di mattoni spezzati raddoppiare le distanze.
La coppia di serraggio deve essere regolata in funzione della resistenza del materiale base.

Oteraccordi S.p.A. reserves the right to change the information contained in this catalogue without notice.

5420-01

16ACFIS

Anchor for plasterboard

- Material: white galvanized steel > 5 µm ISO 4042

CHARACTERISTICS: Metal expansion anchor complete with flanged screw with torx head. It expands with the appropriate tool art. 5420-01-TOOL.
USE: ideal for plasterboard, panels/sheets and for installing radiator bracket art. 417-ST. Partially suitable for perforated brick, perforated block Leca and perforated block in concrete.

CODICE	MxL	mm	CG mm				€ Each
C4201	M6X45	12	5÷12	16	25	50	**1,07**
C4202	M6X60	12	5÷18	16	25	50	**1,17**
C4203	M6X74	12	18÷32	20	30	50	**1,31**

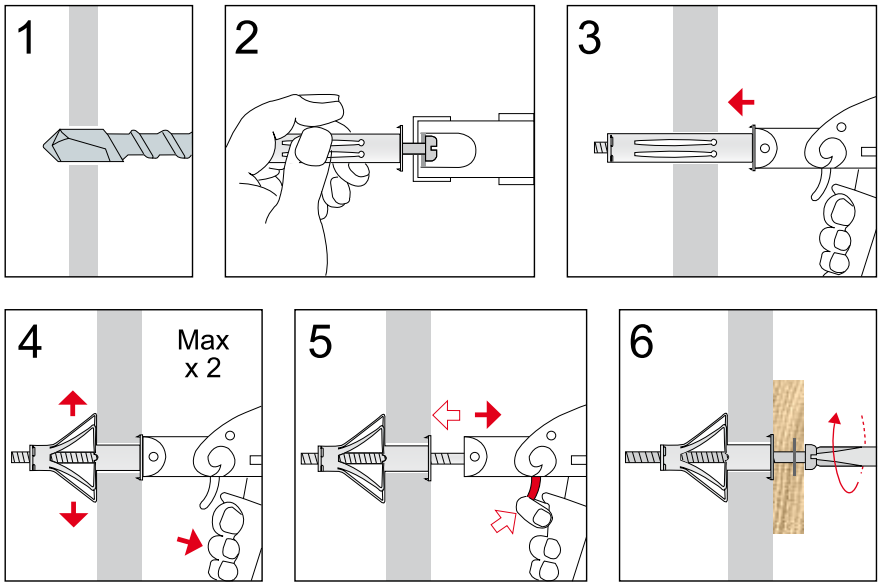

5420-01-TOOL

16ACFIS

PLIERS FOR ANCHOR

USE: in order to close correctly art. 5420-01. A plier for all anchor lengths art. 5420-01.

CODICE		€ Each
C4200	1	65,56

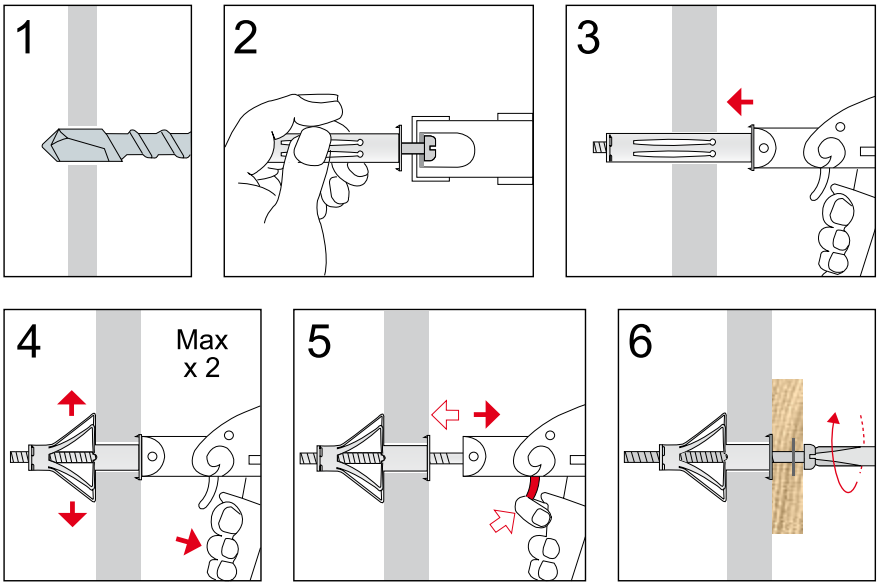

Oteraccordi S.p.A. reserves the right to change the information contained in this catalogue without notice.

SYNOPTIC TABLE DOWELS

Art.		*Pag.*									
Metallic dowels											
5000		223	●	●	⊛	○	○	○	○	○	○
5000-01		224	●	●	⊛	○	○	○	○	○	○
5000-03		224	●	●	⊛	○	○	○	○	○	○
5030		225	●	●	○	○	○	○	○	○	○
5030-I		226	●	●	○	○	○	○	○	○	○
5040	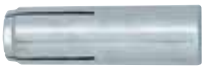	227	●	●	○	○	○	○	○	○	○
5040-01		228									
Screws for concrete											
5120		229	●	⊛	●	○	⊛	○	○	○	○
5120-01		230	●	○	●	○	○	○	○	○	●
Light dowels											
5200		231	●	●	●	○	●	●	●	●	○
5201		232	●	●	●	○	●	●	●	●	○
5202		233	●	●	●	○	●	●	●	●	○
5203		234	●	●	●	○	●	●	●	●	○
5204-L		264	●	●	●	○	●	●	●	●	○
5205-L		235	●	●	●	○	●	●	●	●	○
5420-01		236	○	○	○	○	●	○	●	○	○
5420-01-TOOL		238									

note

RADIATOR
FITTINGS

AQUAOTER

100-B5-42

01TAPRI

Kit for aluminium radiators

- n°2 right reducers with indentation and gasket art.100-VG
- n°2 left reducers with indentation and gasket art.100-VG
- n°1 chrome plated brass plug with white cap and O-RING gasket art.150
- n°1 chrome plated brass air vent with assembled gasket and Teflon closing ring art.145
- White powder-coated in RAL 9010 and RAL 9016 on galvanized basis.
- The gaskets are O-RING in EPDM art.133

USE: ideal for fast management of radiator fittings in construction site and to preserve from shocks and scratches which damage the surface finishing treatment. In order to avoid damaging the fittings during installation on radiators, we recommend using the key art.115.

CODICE	Ø FL	MxF	valve art.	RAL		€ Each
100B10	42	1"x3/8"	145	9010	25	**15,38**
100B11	42(*)	1"x3/8"	145	9016	25	**15,38**
100B01	42	1"x1/2"	145	9010	25	**15,73**
100B02	42(*)	1"x1/2"	145	9016	25	**15,73**

(*) always check availability and delivery times

100-B5-48

01TAPRI

Kit for cast iron radiators

- n°2 right reducers with indentation and gasket art.100-VG
- n°2 left reducers with indentation and gasket art.100-VG
- n°1 chrome plated brass plug with white cap and O-RING gasket art.150
- n°1 chrome plated brass air vent with assembled gasket and Teflon closing ring art.145
- White powder-coated in RAL 9010 and RAL 9016 on galvanized basis.
- The gaskets are O-RING in EPDM art.133

USE: ideal for fast management of radiator fittings in construction site and to preserve from shocks and scratches which damage the surface finishing treatment. In order to avoid damaging the fittings during installation on radiators, we recommend using the key art.115.

CODICE	Ø FL	MxF	valve art.	RAL		€ Each
100B22	48	1"x3/8"	145	9010	25	**16,57**
100B20	48	1"x1/2"	145	9010	25	**17,16**

Oteraccordi S.p.A. reserves the right to change the information contained in this catalogue without notice.

100-B5-56

01TAPRI

Kit for steel radiators

- n°2 right reducers with indentation and gasket art.100-VG
- n°2 left reducers with indentation and gasket art.100-VG
- n°1 chrome plated brass plug with white cap and O-RING gasket art.150
- n°1 chrome plated brass air vent with assembled gasket and Teflon closing ring art.145
- White powder-coated in RAL 9010 and RAL 9016 on galvanized basis.
- The gaskets are O-RING in EPDM art.133

USE: ideal for fast management of radiator fittings in construction site and to preserve from shocks and scratches which damage the surface finishing treatment. In order to avoid damaging the fittings during installation on radiators, we recommend using the key art.115.

CODICE	Ø FL	MxF	valve art.	RAL		€ Each
100B34	56	1.1/4"x3/8"	145	9010	15	**35,74**
100B35	56(*)	1.1/4"x3/8"	145	9016	15	**35,74**
100B30	56	1.1/4"x1/2"	145	9010	15	**35,96**
100B31	56(*)	1.1/4"x1/2"	145	9016	15	**35,96**

(*) always check availability and delivery times

100-B9-42

01TAPRI

Kit for aluminium radiators

- n°2 right reducers with indentation and gasket art.100-VG
- n°2 left reducers with indentation and gasket art.100-VG
- n°1 chrome plated brass plug with white cap and O-RING gasket art.150
- n°1 chrome plated brass air vent with O-RING art.149
- n.1 nylon key art.151 for art.149
- White powder-coated in RAL 9010 and RAL 9016 on galvanized basis.
- The gaskets are O-RING in EPDM art.133

USE: ideal for fast management of radiator fittings in construction site and to preserve from shocks and scratches which damage the surface finishing treatment. In order to avoid damaging the fittings during installation on radiators, we recommend using the key art.115.

CODICE	Ø FL	MxF	valve art.	RAL		€ Each
100B12	42	1"x3/8"	149	9010	25	**15,60**
100B13	42(*)	1"x3/8"	149	9016	25	**15,60**
100B03	42	1"x1/2"	149	9010	25	**15,38**
100B04	42(*)	1"x1/2"	149	9016	25	**15,38**
100B09	42	1"x3/4"	149	9010	25	**21,16**

(*) always check availability and delivery times

Oteraccordi S.p.A. reserves the right to change the information contained in this catalogue without notice.

100-B9-48

01TAPRI

Kit for cast iron radiators

- n°2 right reducers with indentation and gasket art.100-VG
- n°2 left reducers with indentation and gasket art.100-VG
- n°1 chrome plated brass plug with white cap and O-RING gasket art.150
- n°1 chrome plated brass air vent with O-RING art.149
- n.1 nylon key art.151 for art.149
- White powder-coated in RAL 9010 on galvanized basis.
- The gaskets are O-RING in EPDM art.133

USE: ideal for fast management of radiator fittings in construction site and to preserve from shocks and scratches which damage the surface finishing treatment. In order to avoid damaging the fittings during installation on radiators, we recommend using the key art.115.

CODICE	Ø FL	MxF	valve art.	RAL		€ Each
100B23	48	1"x3/8"	149	9010	25	**15,72**
100B21	48	1"x1/2"	149	9010	25	**15,88**

100-B9-56

01TAPRI

Kit for steel radiators

- n°2 right reducers with indentation and gasket art.100-VG
- n°2 left reducers with indentation and gasket art.100-VG
- n°1 chrome plated brass plug with white cap and O-RING gasket art.150
- n°1 chrome plated brass air vent with O-RING art.149
- n.1 nylon key art.151 for art.149
- White powder-coated in RAL 9010 and RAL 9016 on galvanized basis.
- The gaskets are O-RING in EPDM art.133

USE: ideal for fast management of radiator fittings in construction site and to preserve from shocks and scratches which damage the surface finishing treatment. In order to avoid damaging the fittings during installation on radiators, we recommend using the key art.115.

CODICE	Ø FL	MxF	valve art.	RAL		€ Each
100B36	56	1.1/4"x3/8"	149	9010	15	**35,74**
100B37	56(*)	1.1/4"x3/8"	149	9016	15	**35,74**
100B32	56	1.1/4"x1/2"	149	9010	15	**35,96**
100B33	56(*)	1.1/4"x1/2"	149	9016	15	**35,96**

(*) always check availability and delivery times

Oteraccordi S.p.A. reserves the right to change the information contained in this catalogue without notice.

100-B5-42-4S

01TAPRI

KIT FOR ALUMINIUM RADIATORS WITH FLAT WALL BRACKETS

- n°2 right reducers with indentation and gasket art.100-VG
- n°2 left reducers with indentation and gasket art.100-VG
- n°1 chrome plated brass plug with white cap and O-RING gasket art.150
- n°1 chrome plated brass air vent with assembled gasket and Teflon closing ring art.145
- n.2 plastic coated wall brackets RAL 9010 art.414VS with fixing nylon dowels
- Wall bracket capacity 34 Kg.
- Dowel hole Ø10 mm
- The gaskets are O-RING in EPDM art.133

USE: it allows quick installation thanks to the wall brackets contained in the package, ideal for management of radiator fittings in construction site and to preserve the same from shocks and scratches which damage the surface finishing treatment. To avoid damaging the fittings during installation on radiators, we recommend using the key art.115.

CODICE	mm	Ø FL	MxF	valve art.	RAL		€ Each
100B14	414-V-S Lg.170	42	1"x3/8"	145	9010	20	**25,27**
100B05	414-V-S Lg.170	42	1"x1/2"	145	9010	20	**26,21**

100-B9-42-4S

01TAPRI

KIT FOR ALUMINIUM RADIATORS WITH FLAT WALL BRACKETS

- n°2 right reducers with indentation and gasket art.100-VG
- n°2 left reducers with indentation and gasket art.100-VG
- n°1 chrome plated brass plug with white cap and O-RING gasket art.150
- n°1 chrome plated brass air vent with O-RING art.149
- n.1 nylon key for air vent art.151
- n.2 plastic coated wall brackets RAL 9010 art.414-VS with fixing nylon dowels
- Wall bracket capacity 34 Kg.
- Dowel hole Ø10 mm
- The gaskets are O-RING in EPDM art.133

USE: it allows quick installation thanks to the wall brackets contained in the package, ideal for management of radiator fittings in construction site and to preserve the same from shocks and scratches which damage the surface finishing treatment. To avoid damaging the fittings during installation on radiators, we recommend using the key art.115.

CODICE	mm	Ø FL	MxF	valve art.	RAL		€ Each
100B07	414-V-S Lg.170	42	1"x1/2"	149	9010	20	**25,27**

Oteraccordi S.p.A. reserves the right to change the information contained in this catalogue without notice.

100-B5-42-5

01TAPRI

KIT FOR ALUMINIUM RADIATORS WITH ROUND WALL BRACKETS

- n°2 right reducers with indentation and gasket art.100-VG
- n°2 left reducers with indentation and gasket art.100-VG
- n°1 chrome plated brass plug with white cap and O-RING gasket art.150
- n°1 chrome plated brass air vent with assembled gasket and Teflon closing ring art.145
- n.2 plastic coated wall brackets RAL 9010 art.415-V with fixing nylon dowels
- Wall bracket capacity 34 Kg.
- Dowel hole Ø10 mm
- The gaskets are O-RING in EPDM art.133

USE: it allows quick installation thanks to the wall brackets contained in the package, ideal for management of radiator fittings in construction site and to preserve the same from shocks and scratches which damage the surface finishing treatment. To avoid damaging the fittings during installation on radiators, we recommend using the key art.115.

CODICE	mm	Ø FL	MxF	valve art.	RAL		€ Each
100B15	415-V Lg.170	42	1"x3/8"	145	9010	20	**27,14**

100-B5-42-5S

01TAPRI

KIT FOR ALUMINIUM RADIATORS WITH FLAT WALL BRACKETS

- n°2 right reducers with indentation and gasket art.100-VG
- n°2 left reducers with indentation and gasket art.100-VG
- n°1 chrome plated brass plug with white cap and O-RING gasket art.150
- n°1 chrome plated brass air vent with assembled gasket and Teflon closing ring art.145
- n.2 plastic coated wall brackets RAL 9010 art.415VS with fixing nylon dowels
- Wall bracket capacity 34 Kg.
- Dowel hole Ø10 mm
- The gaskets are O-RING in EPDM art.133

USE: it allows quick installation thanks to the wall brackets contained in the package, ideal for management of radiator fittings in construction site and to preserve the same from shocks and scratches which damage the surface finishing treatment. To avoid damaging the fittings during installation on radiators, we recommend using the key art.115.

CODICE	mm	Ø FL	MxF	valve art.	RAL		€ Each
100B06	415-V-S Lg.170	42	1"x1/2"	145	9010	20	**28,65**

Oteraccordi S.p.A. reserves the right to change the information contained in this catalogue without notice.

100-B9-42-5

01TAPRI

KIT FOR ALUMINIUM RADIATORS WITH ROUND WALL BRACKETS

- n°2 right reducers with indentation and gasket art.100-VG
- n°2 left reducers with indentation and gasket art.100-VG
- n°1 chrome plated brass plug with white cap and O-RING gasket art.150
- n°1 chrome plated brass air vent with O-RING art.149
- n.1 nylon key for air vent art.151
- n.2 plastic coated wall brackets RAL 9010 art.415-V with fixing nylon dowels
- Wall bracket capacity 34 Kg.
- Dowel hole Ø10 mm
- The gaskets are O-RING in EPDM art.133

USE: it allows quick installation thanks to the wall brackets contained in the package, ideal for management of radiator fittings in construction site and to preserve the same from shocks and scratches which damage the surface finishing treatment. To avoid damaging the fittings during installation on radiators, we recommend using the key art.115.

CODICE	mm	Ø FL	MxF	valve art.	RAL		€ Each
100B16	415-V Lg.170	42	1"x3/8"	149	9010	20	**27,07**
100B08	415-V Lg.170	42	1"x1/2"	149	9010	20	**27,14**

100-C

01TAPRI

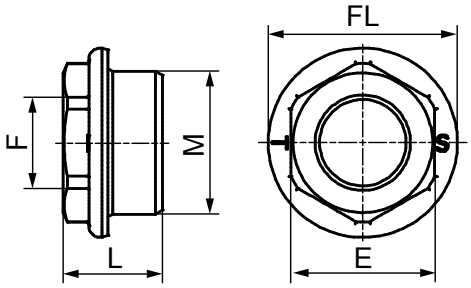

NICKEL PLATED REDUCER WITH GASKET

- Material: Brass
- Thread UNI - ISO 228/1 CL.B
- Nickel Plating UNI EN ISO 4526:2004
- Assembled Gasket O-RING in EPDM
- Working Temperature-30° ÷ +120°C

USE: Chromed brass right reducer for radiator with OR sealing.

CODICE	Ø FL	MxF	E [mm]	L [mm]		€ Each
100C01	24	1/2"x1/4"	22	13	100	**2,87**
100C02	24	1/2"x3/8"	22	13	100	**2,71**

N.B. Item available until stocks last

Oteraccordi S.p.A. reserves the right to change the information contained in this catalogue without notice.

111-C

01TAPRI

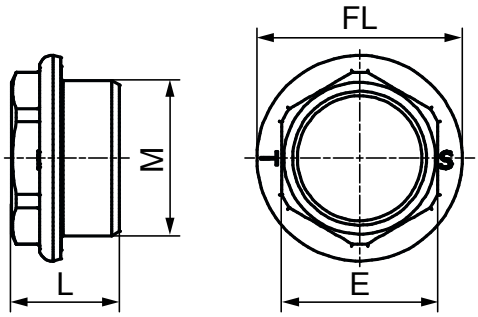

Nickel plated plug with gasket

- Material: Brass
- Thread UNI - ISO 228/1 CL.B
- Nickel Plating UNI EN ISO 4526:2004
- Assembled gasket O-RING
- in EPDM
- Working temperature -30° ÷ +120°C

USE: Chromed brass right plug for radiator with OR sealing.

CODICE	Ø FL	M	E [mm]	L [mm]		€ Each
111C01	24	1/2"	22	13	100	**2,45**

100-V

01TAPRI

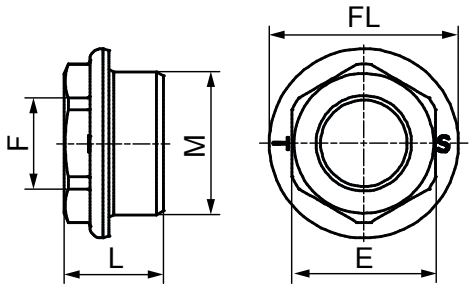

Painted reducer

- Steel CB 4 FFKD EN119-74
- Thread UNI - ISO 228/1 CL.B (Rh - Lh)
- Electrolytic galvanizing UNI ISO 2081:2018 th. 6 ÷ 9 [µm]
- White powder paint RAL 9010

USE: cold printed and painted right -left reducer for radiators.

CODICE		Ø FL	MxF	E [mm]	L [mm]		€ Each
100V21	DX	42	1"x1/4"	32	22	10/50	**2,45**
100V22	SX	42	1"x1/4"	32	22	10/50	**2,45**
100V25	DX	42	1"x3/8"	32	22	10/50	**2,45**
100V26	SX	42	1"x3/8"	32	22	10/50	**2,14**
100V23	DX	42	1"x1/2"	32	22	10/50	**2,52**
100V24	SX	42	1"x1/2"	32	22	10/50	**2,52**
100V27	DX	42	1"x3/4"	32	22	10/50	**2,89**
100V28	SX	42	1"x3/4"	32	22	10/50	**2,89**
100V81	DX	48	1"x1/4"	32	22	10/50	**2,71**
100V82	SX	48	1"x1/4"	32	22	10/50	**2,71**
100V85	DX	48	1"x3/8"	32	22	10/50	**2,71**
100V86	SX	48	1"x3/8"	32	22	10/50	**2,71**
100V83	DX	48	1"x1/2"	32	22	10/50	**2,89**
100V84	SX	48	1"x1/2"	32	22	10/50	**2,89**
100V87	DX	48	1"x3/4"	32	22	10/50	**3,26**
100V88	SX	48	1"x3/4"	32	22	10/50	**3,26**
100V71	DX	56	1.1/4"x1/4"	41	24	5/25	**5,21**
100V72	SX	56	1.1/4"x1/4"	41	24	5/25	**5,21**
100V75	DX	56	1.1/4"x3/8"	41	24	5/25	**5,21**
100V76	SX	56	1.1/4"x3/8"	41	24	5/25	**5,21**
100V73	DX	56	1.1/4"x1/2"	41	24	5/25	**5,21**
100V74	SX	56	1.1/4"x1/2"	41	24	5/25	**5,21**
100V77	DX	56	1.1/4"x3/4"	41	24	5/25	**5,86**
100V78	SX	56	1.1/4"x3/4"	41	24	5/25	**5,86**

Oteraccordi S.p.A. reserves the right to change the information contained in this catalogue without notice.

100-VG

01TAPRI

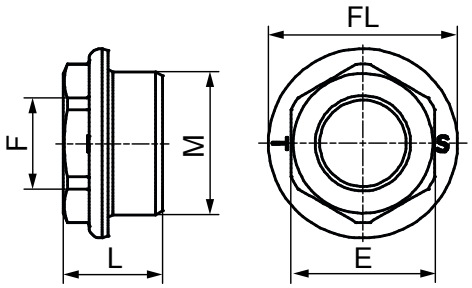

PAINTED REDUCER WITH INDENTATION AND GASKET

- Steel CB 4 FFKD EN119-74
- Thread UNI - ISO 228/1 CL.B (Rh - Lh)
- Electrolytic galvanizing UNI ISO 2081:2018 th. 6 ÷ 9 [µm]
- White powder paint RAL 9010
- Gasket in EPDM art.133

USE: cold printed and painted right -left reducer with indentation and gasket for radiators. This reducer is included in our Kit art.100-B

CODICE		Ø FL	MxF	E [mm]	L [mm]		€ Each
100G21	DX	42	1"x1/4"	32	22	10/50	2,80
100G22	SX	42	1"x1/4"	32	22	10/50	2,80
100G25	DX	42	1"x3/8"	32	22	10/50	2,80
100G26	SX	42	1"x3/8"	32	22	10/50	2,80
100G23	DX	42	1"x1/2"	32	22	10/50	3,07
100G24	SX	42	1"x1/2"	32	22	10/50	3,07
100G27	DX	42	1"x3/4"	32	22	10/50	3,96
100G28	SX	42	1"x3/4"	32	22	10/50	3,96
100G71	DX	56	1.1/4"x1/4"	41	24	5/25	7,22
100G72	SX	56	1.1/4"x1/4"	41	24	5/25	7,22
100G75	DX	56	1.1/4"x3/8"	41	24	5/25	7,22
100G76	SX	56	1.1/4"x3/8"	41	24	5/25	7,22
100G73	DX	56	1.1/4"x1/2"	41	24	5/25	7,31
100G74	SX	56	1.1/4"x1/2"	41	24	5/25	7,31
100G77	DX	56	1.1/4"x3/4"	41	24	5/25	7,74
100G78	SX	56	1.1/4"x3/4"	41	24	5/25	7,74

Oteraccordi S.p.A. reserves the right to change the information contained in this catalogue without notice.

100-Z

01TAPRI

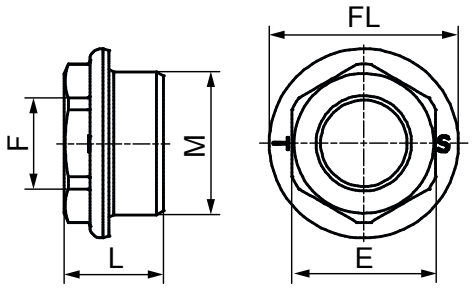

Galvanized reducer

- Steel CB 4 FFKD EN119-74
- Thread UNI - ISO 228/1 CL.B (Rh - Lh)
- Electrolytic galvanizing UNI ISO 2081:2018 th. 6 ÷ 9 [µm]

USE: cold printed and galvanized right -left reducer for radiators.

CODICE		Ø FL	MxF	E [mm]	L [mm]		€ Each
100Z43	DX	34	3/4"x3/8"	26	22	100	1,83
100Z41	DX	34	3/4"x1/2"	26	22	100	3,00
100Z21	DX	42	1"x1/4"	32	22	100	1,88
100Z22	SX	42	1"x1/4"	32	22	100	1,88
100Z25	DX	42	1"x3/8"	32	22	100	1,88
100Z26	SX	42	1"x3/8"	32	22	100	1,88
100Z23	DX	42	1"x1/2"	32	22	100	1,88
100Z24	SX	42	1"x1/2"	32	22	100	1,88
100Z27	DX	42	1"x3/4"	32	22	100	2,08
100Z28	SX	42	1"x3/4"	32	22	100	2,08
100Z81	DX	48	1"x1/4"	32	22	100	2,00
100Z82	SX	48	1"x1/4"	32	32	100	2,00
100Z85	DX	48	1"x3/8"	32	22	100	2,08
100Z86	SX	48	1"x3/8"	32	22	100	2,08
100Z83	DX	48	1"x1/2"	32	22	100	2,08
100Z84	SX	48	1"x1/2"	32	22	100	2,08
100Z87	DX	48	1"x3/4"	32	22	100	2,27
100Z88	SX	48	1"x3/4"	32	22	100	2,27
100Z71	DX	56	1.1/4"x1/4"	41	24	50	4,08
100Z72	SX	56	1.1/4"x1/4"	41	24	50	4,08
100Z75	DX	56	1.1/4"x3/8"	41	24	50	4,08
100Z76	SX	56	1.1/4"x3/8"	41	24	50	4,09
100Z73	DX	56	1.1/4"x1/2"	41	24	50	4,19
100Z74	SX	56	1.1/4"x1/2"	41	24	50	4,19
100Z77	DX	56	1.1/4"x3/4"	41	24	50	4,50
100Z78	SX	56	1.1/4"x3/4"	41	24	50	4,50
100Z79	DX	56	1.1/4"x1"	41	24	50	4,91
100Z10	SX	56	1.1/4"x1"	41	24	50	4,91

Oteraccordi S.p.A. reserves the right to change the information contained in this catalogue without notice.

111-V

01TAPRI

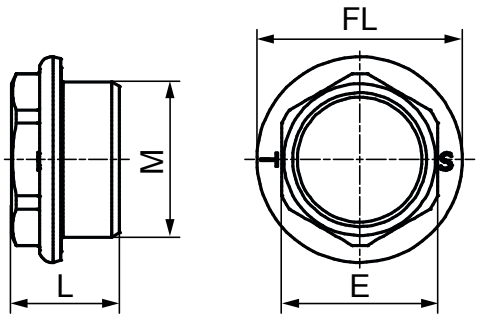

Painted plug

- Steel CB 4 FFKD EN119-74
- Thread UNI - ISO 228/1 CL.B (Rh - Lh)
- Electrolytic Galvanizing UNI ISO 2081:2018 th. 6 ÷ 9 [µm]
- White powder paint RAL 9010

USE: cold printed and painted right-left plug for radiators

CODICE		Ø FL	M	E [mm]	L [mm]		€ Each
111V21	DX	42	1"	32	22	10/50	**2,17**
111V22	SX	42	1"	32	22	10/50	**2,17**
111V81	DX	48	1"	32	22	10/50	**2,63**
111V82	SX	48	1"	32	22	10/50	**2,63**
111V71	DX	56	1.1/4"	41	24	5/25	**5,21**
111V72	SX	56	1.1/4"	41	24	5/25	**5,21**

111-VG

01TAPRI

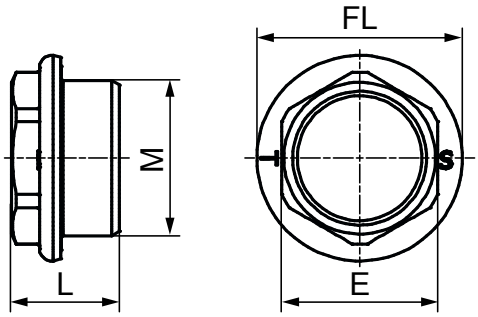

Tappo verniciato con incavo e guarnizione

- Steel CB 4 FFKD EN119-74
- Thread UNI - ISO 228/1 CL.B (Rh - Lh)
- Electrolytic Galvanizing UNI ISO 2081:2018 th. 6 ÷ 9 [µm]
- White powder paint RAL 9010
- EPDM Gasket art.133

USE: cold printed and painted right-left plug with indentation and gasket for radiators

CODICE		Ø FL	M	E [mm]	L [mm]		€ Each
111G21	DX	42	1"	32	22	10/50	**2,80**
111G22	SX	42	1"	32	22	10/50	**2,80**
111G71	DX	56	1.1/4"	41	24	5/25	**7,10**
111G72	SX	56	1.1/4"	41	24	5/25	**7,10**

Oteraccordi S.p.A. reserves the right to change the information contained in this catalogue without notice.

111-Z

01TAPRI

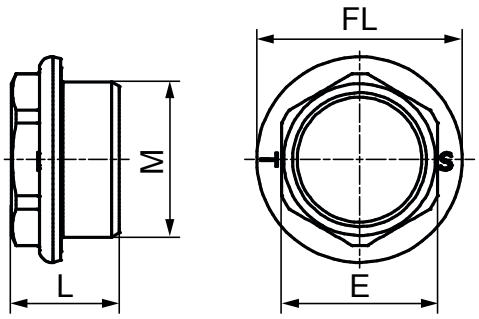

Galvanized plug

- Steel CB 4 FFKD EN119-74
- Thread UNI - ISO 228/1 CL.B (Rh - Lh)
- Electrlolytic Galvanizing UNI ISO 2081:2018 th. 6 ÷ 9 [µm]

USE: cold printed and galvanized right-left plug for radiators

CODICE		Ø FL	M	E [mm]	L [mm]		€ Each
111Z70	DX	27	1/2"	22	18	100	**1,99**
111Z41	DX	34	3/4"	26	20	100	**1,99**
111Z21	DX	42	1"	32	22	100	**1,77**
111Z22	SX	42	1"	32	22	100	**1,77**
111Z81	DX	48	1"	32	22	100	**1,88**
111Z82	SX	48	1"	32	22	100	**1,88**
111Z71	DX	56	1.1/4"	41	24	50	**4,08**
111Z72	SX	56	1.1/4"	41	24	50	**4,08**

115

01TAPRI

Key

- Material: nylon
- suitable hexagonal central seat for the following items
- art.145 1/2" air vent valve
- art.146 1/2" air vent valve
- art.149 3/8÷1/2" air vent valve
- art.150 3/8÷1/2" Chrome plated plug

USE: key for painted plugs and reducers.

CODICE	Ø FL		€ Each
115001	32 - 42 - 48 - 56	1	**16,23**

Oteraccordi S.p.A. reserves the right to change the information contained in this catalogue without notice.

122-N

01TAPRI

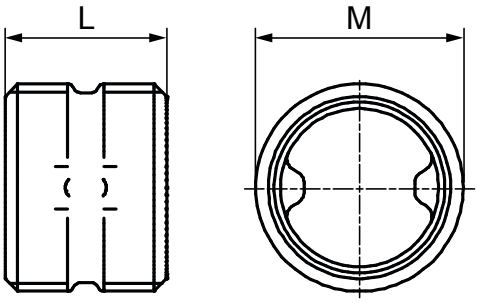

Black nipple

- Steel S235JR EN 10025
- Thread UNI - ISO 228/1 CL.B (Rh - Lh)

USE: nipples in black steel right -left for connecting radiator elements.

CODICE	L [mm]	M [mm]		€ Each
122006	25,5	1"	100	1,26
122C06	25,5	1"	500	1,09
122007	27,5	1.1/4"	100	1,90
122C07	27,5	1.1/4"	400	1,69

122-Z

01TAPRI

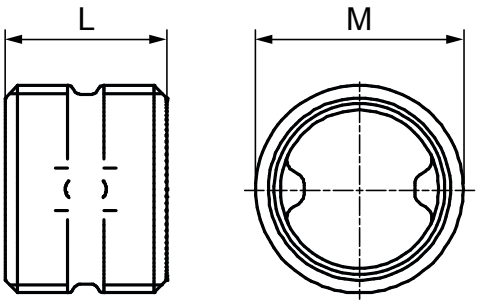

Galvanized nipple

- Steel S235JR EN 10025
- Thread UNI - ISO 228/1 CL.B (Rh - Lh)
- Electrolytic Galvanizing UNI ISO 2081:2018 th. 6 ÷ 9 [µm]

USE: nipples in galvanized steel right -left for connecting radiator elements.

CODICE	L [mm]	M [mm]		€ Each
122Z06	25,5	1"	100	1,38
122Z07	27,5	1.1/4"	100	2,17

Oteraccordi S.p.A. reserves the right to change the information contained in this catalogue without notice.

133-C

01TAPRI

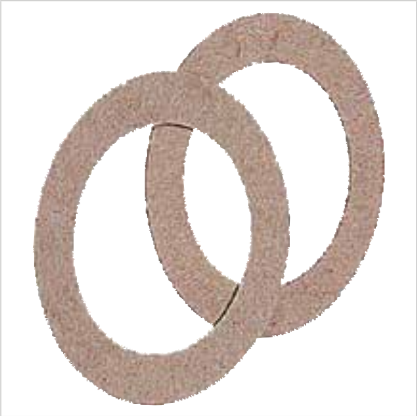

PAPER GASKET FOR RADIATORS ELEMENTS

- 100% Paper pure recyclabe cellulose
- Maximum working temperature + 110 ° C "

USE: gasket for connecting radiator elements

CODICE	Ø FL	ØxSp		€ Each
133001	42	1"x0,5	200	**0,14**
133002	48	1"x0,5	200	**0,16**
133003	56	1.1/4"x0,5	200	**0,17**

133-E.A

01TAPRI

FASIT GASKET FOR RADIATORS PLUG/REDUCERS

- Gasket composed of cellulose fibers and mineral fillers
- Elastomeric bonding agentbased on NBR
- Maximum temperature of continuous working with steam + 120 ° C
- Maximum continuous working temperature with non-aggressive fluids + 140 ° C

USE: gasket for connecting radiator elements

CODICE	Ø FL	caps / reductions	x Art.	ØxSp		€ Each
133004	42	Flangia piana	100-111/Z-V	1"x1,0	100	**0,41**
133005	42	Flangia piana	100-111/Z-V	1"x2,0	100	**0,42**
133006	48	Flangia piana	100-111/Z-V	1"x2,0	100	**0,46**
133007	56	Flangia piana	100-111/Z-V	1.1/4"x2,0	100	**0,77**

Oteraccordi S.p.A. reserves the right to change the information contained in this catalogue without notice.

133-EPDM

01TAPRI

EPDM GASKET FOR RADIATORS PLUG/REDUCERS

- Material: rubber in EPDM
- Maximum working temperature -30°C ÷ +110°C

USE: gasket for connecting radiator elements

CODICE	Ø FL	caps / reductions	x Art.	ØxSp		€ Each
133008	42	Flangia con incavo	100-111/VG	1"x2,5	100	**0,43**
133009	42	Flangia con incavo	100-111/VG	1"x3,0	100	**0,59**
133010	48	Flangia con incavo	100-111/VG	1"x2,5	100	**0,55**
133011	56	Flangia con incavo	100-111/VG	1.1/4"x3,0	100	**0,82**

133-S

01TAPRI

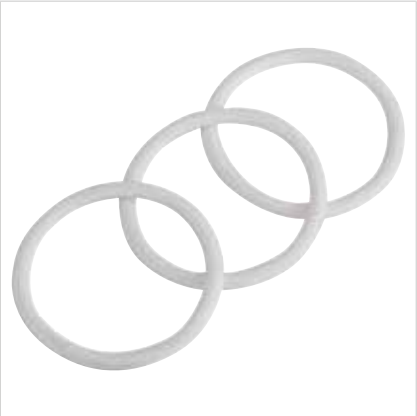

SILICON GASKET FOR RADIATORS PLUG/REDUCERS

- Material: Silicon
- maximum working temperature of -40 ° C to + 180 ° C "

USE: gasket for connecting radiator elements

CODICE	Ø FL	caps / reductions	x Art.	ØxSp		€ Each
133012	42	Flangia con incavo	100-111/VG	1"x2,5	100	**0,51**
133013	56	Flangia con incavo	100-111/VG	1.1/4"x3,0	100	**1,64**

Oteraccordi S.p.A. reserves the right to change the information contained in this catalogue without notice.

145

01TAPRI

Chromium plated air valve with teflon

- Valve Material: Brass
- Gasket material : Teflon
- Thread UNI - ISO 228/1 cl.B
- Chrome plating UNI EN 1456: 2018 th. 10 ÷ 15 [uM]
- Maximum working temperature + 80 ° C
- Test pressure 16 Bar "

USE: Chrome-plated brass valve, manual air vent with flyer HostraformTeflon ring.

CODICE	Ø		€ Each
145002	1/4"	100	3,17
145003	3/8"	100	3,75
145004	1/2"	100	5,16

146

01TAPRI

Chromium plated air valve

- Material: Brass
- Thread UNI - ISO 228/1 cl.B
- Chrome plating UNI EN 1456: 2018 th. 10 ÷ 15 [uM]
- Maximum working temperature + 80 ° C
- Test pressure 16 Bar

USE: Chrome-plated brass valve, manual air vent with flyer Hostraform.

CODICE	Ø		€ Each
146001	1/8"	100	2,31
146002	1/4"	100	2,59
146003	3/8"	100	3,59
146004	1/2"	100	5,32

Oteraccordi S.p.A. reserves the right to change the information contained in this catalogue without notice.

149

01TAPRI

Chromium plated air valve with o-ring

- Material: Brass
- Thread UNI - ISO 228/1 cl.B
- Chrome plating UNI EN 1456: 2018 th. 10 ÷ 15 [uM]
- O-RING EPDM GASKET
- Test pressure 16 Bar

USE: Chrome - plated brass valve with EPDM o/ring , key opening art.151 and rotating exhaust.

CODICE	Ø		€ Each
149O03	3/8"	100	3,25
149O04	1/2"	100	3,25
149O05	3/4"	50	6,66

150

01TAPRI

Chromium plated plug with o-ring

- Material: Brass
- Thread UNI - ISO 228/1 cl.B
- Chrome plating UNI EN 1456: 2018 sp. 10 ÷ 15 [uM]
- O-RING EPDM
- Maximum working temperature + 80 ° C
- Test pressure 16 Bar

USE: Chrome - plated brass plug with white cap with EPDM o/ring.

CODICE	Ø		€ Each
150003	3/8"	100	1,84
150004	1/2"	100	1,84

Oteraccordi S.p.A. reserves the right to change the information contained in this catalogue without notice.

151

01TAPRI

KEY

- Material: nylon

USE: nylon key to close the valve art.149

CODICE		€ Each
151N00	100	0,65

147

01TAPRI

BIG AUTOMATIC AIR VALVE

- Material: forged brass
- Maximum working temperature + 110 ° C
- Maximum working pressure 10 bar
- Maximum discharge pressure 2.5 bar

USE: Brass automatic air vent

CODICE	Ø		€ Each
147003	3/8"	10	16,63
147004	1/2"	10	17,47

N.B. item available till stocks last

Oteraccordi S.p.A. reserves the right to change the information contained in this catalogue without notice.

01TAPRI

SMALL AUTOMATIC VALVE

- Material: forged brass
- Maximum working temperature + 110 ° C
- Maximum working pressure of 10 bar
- Maximum discharge pressure 2.5 bar

USE: Brass automatic air vent

CODICE	Ø		€ Each
148003	3/8"	10	19,97
148004	1/2"	10	19,97

N.B. item available till stocks last

note

THREADED STEEL FITTINGS

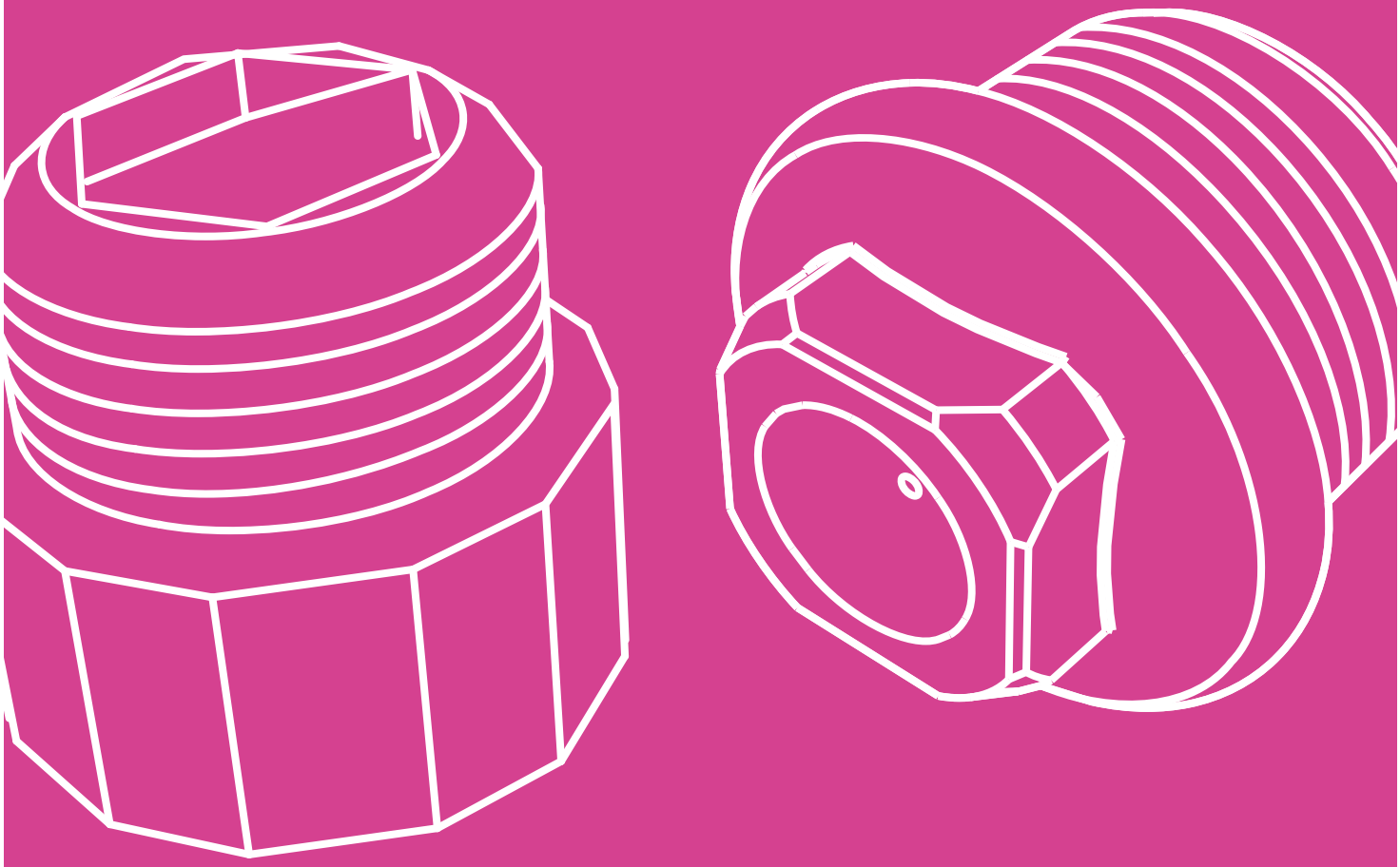

AQUAOTER

02RACZI

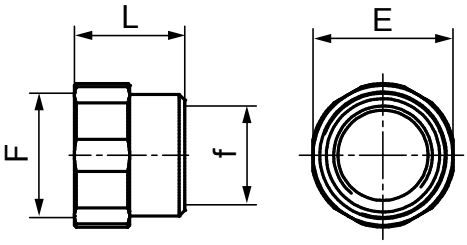

Galvanized reducer with F-F thread

- Material: steel C4C EN 10263
- Thread UNI - ISO 228/1 CL.B
- Electrolytic galvanizing UNI ISO 2081:2018th. 6 ÷ 9 [µm]

CHARACTERISTICS: conforming to regulation ROHS2 2011/65/EU and the transport of drinking water according to DM 174 06-04-04.
USE: suitable for connecting two pipes.

CODICE	Fxf	E [mm]	L [mm]		€ Each
24001	1/4"x1/8"	20	22	10	2,31
24002	3/8"x1/8"	20	24	10	2,00
24003	3/8"x1/4"	20	22	10	1,36
24004	1/2"x1/8"	24	26	10	2,14
24005	1/2"x1/4"	24	27	10	2,60
24006	1/2"x3/8"	24	25,5	100	1,30
24008	3/4"x1/4"	30	24	10	4,78
24009	3/4"x3/8"	30	24	100	4,86
24010	3/4"x1/2"	30	27	100	2,10
24012	1"x3/8"	38	30	100	5,50
24013	1"x1/2"	38	30	100	4,37
24014	1"x3/4"	38	30	100	3,94
24019	1.1/4"x1"	50	33,5	50	13,33

Oteraccordi S.p.A. reserves the right to change the information contained in this catalogue without notice.

241-Z

02RACZI

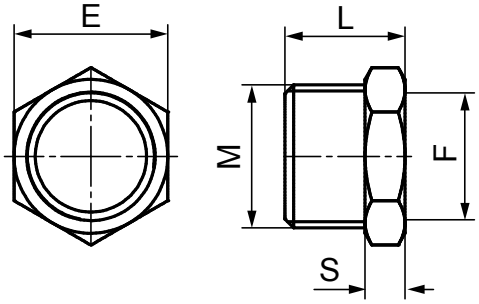

Galvanized reducer with M-F thread

- Material: steel C4C EN 10263
- Thread UNI - ISO 228/1 CL.B
- Electrolytic galvanizing UNI ISO 2081:2018th. 6 ÷ 9 [µm]

CHARACTERISTICS: conforming to regulation ROHS2 2011/65/EU and the transport of drinking water according to DM 174 06-04-04.
USE: suitable for connecting two pipes.

CODICE	MxF	E [mm]	L [mm]	S [mm]		€ Each
24101	1/4"x1/8"	16	16	5	10	**1,40**
24102	3/8"x1/8"	19	17	6	10	**1,97**
24103	3/8"x1/4"	19	17	6	10	**0,72**
24104	1/2"x1/8"	22	21	7	10	**1,40**
24105	1/2"x1/4"	22	21	7	10	**0,94**
24106	1/2"x3/8"	22	21	7	100	**0,78**
24107	3/4"x1/8"	27	21	7	10	**1,83**
24108	3/4"x1/4"	27	21	7	10	**3,24**
24109	3/4"x3/8"	27	21	7	100	**1,19**
24110	3/4"x1/2"	27	21	7	100	**1,09**
24111	1"x1/4"	34	21	7	10	**2,77**
24112	1"x3/8"	34	21	7	100	**2,81**
24113	1"x1/2"	34	21	7	100	**2,10**
24114	1"x3/4"	34	21	7	100	**2,02**
24115	1.1/4"x1/4"	42	23	7	5	**6,67**
24116	1.1/4"x3/8"	42	23	7	50	**7,02**
24117	1.1/4"x1/2"	42	23	7	50	**6,88**
24118	1.1/4"x3/4"	42	23	7	50	**6,88**
24119	1.1/4"x1"	42	23	7	50	**10,50**
24120	1.1/2"x1/4"	50	25	7	5	**28,09**
24121	1.1/2"x3/8"	50	25	7	50	**28,09**
24122	1.1/2"x1/2"	50	25	7	50	**28,09**
24123	1.1/2"x3/4"	50	25	7	50	**28,09**
24124	1.1/2"x1"	50	25	7	50	**28,09**
24125	1.1/2"x1.1/4"	50	25	7	50	**28,09**
24126	2"x3/8"	60	27	7	25	**29,48**
24127	2"x1/2"	60	27	7	25	**29,48**
24128	2"x3/4"	60	27	7	25	**29,48**
24129	2"x1"	60	27	7	25	**29,48**
24130	2"x1.1/4"	60	27	7	25	**30,90**
24131	2"x1.1/2"	60	27	7	25	**30,90**

Oteraccordi S.p.A. reserves the right to change the information contained in this catalogue without notice.

245-Z

02RACZI

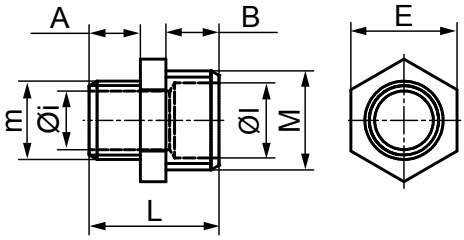

GALVANIZED REDUCER WITH M-M THREAD

- Material: steel C4C EN 10263
- Thread UNI - ISO 228/1 CL.B
- Electrolytic galvanizing UNI ISO 2081:2018th. 6 ÷ 9 [µm]

CHARACTERISTICS: conforming to regulation ROHS2 2011/65/EU and the transport of drinking water according to DM 174 06-04-04.
USE: suitable for connecting two pipes.

CODICE	Mxm	A [mm]	B [mm]	E [mm]	L [mm]	ØI [mm]	Øi [mm]		€ Each
24501	1/4"x1/8"	10	10	14	25	8	6	10	**1,52**
24502	3/8"x1/8"	10	10	17	24,5	11	6	10	**2,02**
24503	3/8"x1/4"	10	11,5	19	26,5	11	8	10	**0,95**
24504	1/2"x1/8"	11	11	22	27	14	6	10	**2,43**
24505	1/2"x1/4"	10	13,5	22	29	14	8	10	**1,37**
24506	1/2"x3/8"	11	13,5	22	30	14	11	100	**1,02**
24507	3/4"x1/8"	11	12,5	27	31	19	6	10	**4,06**
24508	3/4"x1/4"	11	12,5	27	31	9	8	10	**4,35**
24509	3/4"x3/8"	13,5	13,5	27	34	19	11	100	**2,29**
24510	3/4"x1/2"	13,5	13,5	27	34	19	15	100	**1,82**
24511	1"x1/4"	14	16,5	34	39	24	8	10	**7,88**
24512	1"x3/8"	14	16,5	34	39	24	11	100	**9,93**
24513	1"x1/2"	13,5	14,5	34	34,5	24	15	100	**4,01**
24514	1"x3/4"	13,5	14,5	34	34,5	24	19,5	100	**3,03**
24515	1.1/4"x1/4"	11	16	42	34	32	8	5	**8,84**
24516	1.1/4"x3/8"	11	16	42	34	32	11	50	**8,84**
24517	1.1/4"x1/2"	12	16	42	35	32	15	50	**8,84**
24518	1.1/4"x3/4"	13	16	42	35	32	19	50	**8,84**
24519	1.1/4"x1"	15	16	42	38	32	24	50	**11,23**
24521	1.1/2"x3/8"	11	18	50	36	39	11	50	**26,68**
24522	1.1/2"x1/2"	12	18	50	37	39	15	50	**26,68**
24523	1.1/2"x3/4"	12	18	50	37	39	19	50	**26,68**
24524	1.1/2"x1"	15	18	50	40	39	24	50	**26,68**
24525	1.1/2"x1.1/4"	16	18	50	41	39	34	50	**28,09**
24526	2"x3/8"	11	18	60	36	48	11	25	**39,31**
24527	2"x1/2"	12	18	60	37	48	15	25	**39,31**
24528	2"x3/4"	12	18	60	37	48	19	25	**39,31**
24529	2"x1"	14	18	60	39	48	24	25	**39,31**
24530	2"x1.1/4"	18	18	60	41	48	32	25	**42,12**
24531	2"x1.1/2"	18	18	60	43	48	39	25	**44,94**

Oteraccordi S.p.A. reserves the right to change the information contained in this catalogue without notice.

246-I

02RACZI

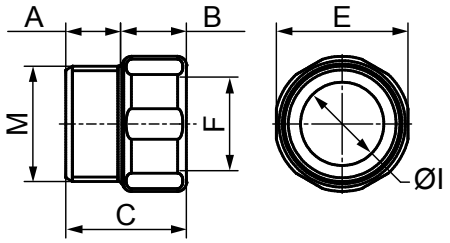

Galvanized reducing socket with M-F thread

- Material: steel C4C EN 10263
- Thread UNI - ISO 228/1 CL.B
- Electrolytic galvanizing UNI ISO 2081:2018th. 6 ÷ 9 [µm]

CHARACTERISTICS: conforming to regulation ROHS2 2011/65/EU and the transport of drinking water according to DM 174 06-04-04.
USE: suitable for connecting two pipes.

CODICE	A [mm]	MxFxB [mm]	B [mm]	C [mm]	E [mm]	ØI [mm]		€ Each
24611	11,5	1/2"x3/8"x15	15	26,5	24	15	100	**2,50**
24617	12,5	3/4"x1/2"x15	15	27,5	30	19	100	**2,29**
24620	14	1"x3/4"x15	15	29	38	24,5	100	**9,03**

Oteraccordi S.p.A. reserves the right to change the information contained in this catalogue without notice.

02RACZI

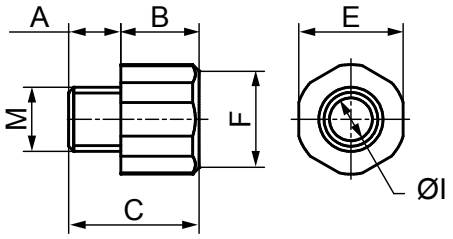

GALVANIZED REDUCING SOCKET WITH M-F THREAD

- Material: steel C4C EN 10263
- Thread UNI - ISO 228/1 CL.B
- Electrolytic galvanizing UNI ISO 2081:2018th. 6 ÷ 9 [µm]

CHARACTERISTICS: conforming to regulation ROHS2 2011/65/EU and the transport of drinking water according to DM 174 06-04-04.
USE: suitable for connecting two pipes.

CODICE	MxF	A [mm]	B [mm]	C [mm]	E [mm]	ØI [mm]		€ Each
24601	1/8"x1/4"x15	10	14	24	17	5	10	**2,16**
24602	1/8"x3/8"x15	10	15	25	17	6	10	**2,52**
24603	1/4"x3/8"x10	10	12	22	20	8	10	**1,37**
24604	1/4"x3/8"x15	10	15	25	20	8	10	**1,37**
24605	1/4"x1/2"x15	10	15	25	24	8	10	**1,58**
24606	3/8"x1/2"x10	11,5	12	23,5	24	9	100	**0,85**
24607	3/8"x1/2"x15	11,5	15	26,5	24	9	100	**1,02**
24608	3/8"x1/2"x20	11,5	20	31,5	24	9	100	**1,03**
24609	3/8"x3/4"x15	13	15	28	30	9	100	**4,00**
24610	3/8"x1"x15	15	15	30	38	9	100	**6,32**
24612	1/2"x3/4"x10	12	12	24	30	12	100	**1,58**
24613	1/2"x3/4"x15	12	15	27	30	12	100	**1,63**
24614	1/2"x3/4"x20	12	20	32	30	12	100	**1,76**
24615	1/2"x1"x15	14,5	15	29,5	38	12	100	**8,42**
24616	1/2"x1"x20	14,5	20	34,5	38	12	100	**11,23**
24618	3/4"x1"x15	14,5	15	29,5	38	17	100	**8,42**
24619	3/4"x1"x20	14,5	20	34,5	38	17	100	**11,23**
24621	1"x1.1/4"x20	15	18,5	33	50	24,5	50	**16,85**

Oteraccordi S.p.A. reserves the right to change the information contained in this catalogue without notice.

269

03MANIZ

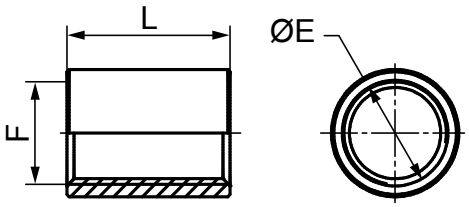

Black half heavy socket

- Material: S235JR EN 10025
- Dimension EN 10241:2002 (DIN 2986)
- Thread UNI - ISO 228/1 CL.B

CHARACTERISTICS: This rule defines the minimum outside diameter of the socket and does not provide tolerance. Pipe sealing is checked either by hydraulic test or by current Foucault test according to SEP 1925/PRP 02.74.
USE: suitable for connecting two pipes.

CODICE	F	L [mm]	ØE [mm]		€ Each
26901	1/8"	8	14,8	10	**1,95**
26902	1/4"	11	18,7	10	**1,10**
26903	3/8"(**)	12	21,9	100	**1,10**
26904	1/2"(**)	17	26,6	100	**1,15**
26905	3/4"(**)	20	33	100	**1,59**
26906	1"(**)	22	39,5	100	**2,21**
26907	1.1/4"	25	49	100	**7,22**
26908	1.1/2"	26	56	100	**8,28**
26909	2"	28	69,5	50	**11,07**
26910	2.1/2"	30	84	25	**14,22**
26911	3"	35	98	25	**18,72**
26913	4"	40	124	20	**30,89**

(**) forged pieces

Oteraccordi S.p.A. reserves the right to change the information contained in this catalogue without notice.

03MANIZ

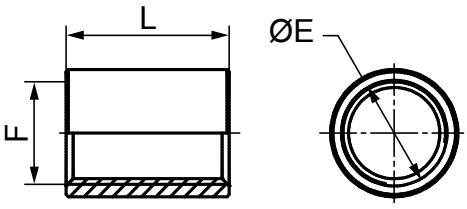

Black socket

- Material: S235JR EN 10025
- Dimension EN 10241:2002 (DIN 2986)
- Thread UNI - ISO 228/1 CL.B

CHARACTERISTICS: This rule defines the minimum outside diameter of the socket and does not provide tolerance. Pipe sealing is checked either by hydraulic test or by current Foucault test according to SEP 1925/PRP 02.74.
USE: suitable for connecting two pipes.

CODICE	F	L [mm]	ØE [mm]		€ Each
26801	1/8"	17	14,8	10	**2,07**
26802	1/4"	25	18,5	10	**1,21**
26803	3/8"(**)	26	21,9	100	**1,26**
26804	1/2"(**)	34	26,6	100	**1,35**
26805	3/4"(**)	36	31,8	100	**1,84**
26806	1"(**)	43	38	100	**2,73**
26807	1.1/4"	48	48,3	10(*)	**6,48**
26808	1.1/2"	48	54,5	10(*)	**7,99**
26809	2"	56	66,3	10(*)	**11,17**
26810	2.1/2"	65	82	10(*)	**14,98**
26811	3"	71	95	6(*)	**22,12**
26813	4"	83	121,5	6(*)	**38,50**

(**) forged pieces
(*) thermoretractil packaging

Oteraccordi S.p.A. reserves the right to change the information contained in this catalogue without notice.

271

03MANIZ

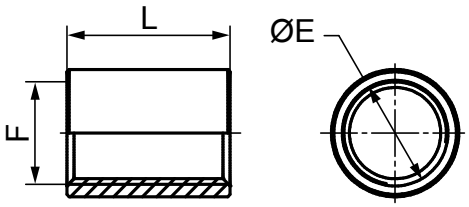

Galvanized socket

- Material: S235JR EN 10025
- Thread UNI - ISO 228/1 CL.B
- Electrolytic galvanizing UNI ISO 2081:2018th. 6 ÷ 9 [µm]

CHARACTERISTICS: conforming to regulation ROHS2 2011/65/EU and the transport of drinking water according to DM 174 06-04-04.
This rule defines the minimum outside diameter of the socket and does not provide tolerance. Pipe sealing is checked either by hydraulic test or by current Foucault test according to SEP 1925/PRP 02.74.
USE: suitable for connecting two pipes.

CODICE	F	L [mm]	ØE [mm]		€ Each
27101	1/8"	17	14,8	10	**1,89**
27102	1/4"	25	18,5	10	**1,29**
27103	3/8"(**)	26	21,9	100	**1,31**
27104	1/2"(**)	34	26,6	100	**1,50**
27105	3/4"(**)	36	31,8	100	**1,92**
27106	1"(**)	43	38	100	**2,87**
27107	1.1/4"	48	48,3	10(*)	**8,00**
27108	1.1/2"	48	54,5	10(*)	**9,23**
27109	2"	56	66,3	10(*)	**12,73**
27110	2.1/2"	65	82	10(*)	**12,70**
27111	3"	71	95	6(*)	**26,18**
27113	4"	83	121,5	6(*)	**49,12**
27114	5"	92	146,3	2(*)	**84,33**
27115	6"	92	173,3	2(*)	**148,28**

(**) forged pieces
(*) thermoretractil packaging

Oteraccordi S.p.A. reserves the right to change the information contained in this catalogue without notice.

03MANIZ

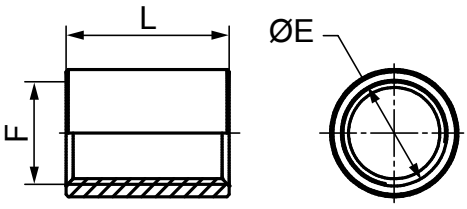

Heavy black socket

- Material: S235JR EN 10025
- Dimension EN 10241:2002 (DIN 2986)
- Thread UNI - ISO 228/1 CL.B

CHARACTERISTICS: This rule defines the minimum outside diameter of the socket and does not provide tolerance. Pipe sealing is checked either by hydraulic test or by current Foucault test according to SEP 1925/PRP 02.74.
USE: suitable for connecting two pipes.

CODICE	F	L [mm]	ØE [mm]		€ Each
27005	3/4"	36	33,3	100	**4,38**
27006	1"	43	40	100	**5,08**
27007	1.1/4"	48	49	10(*)	**8,32**
27008	1.1/2"	48	56	10(*)	**10,76**
27009	2"	56	68,5	10(*)	**14,27**
27010	2.1/2"	65	84	10(*)	**20,97**
27011	3"	71	98	6(*)	**26,09**
27012	3.1/2"	75	114	6(*)	**49,15**
27013	4"	83	124,5	6(*)	**48,58**
27014	5"	92	152,5	2(*)	**75,33**
27015	6"	92	177	2(*)	**128,52**

(*) thermoretractil packaging

Oteraccordi S.p.A. reserves the right to change the information contained in this catalogue without notice.

268-SP

03MANIZ

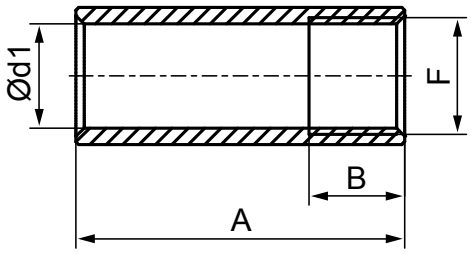

Black socket for tanks

- Material: S235JR EN 10025
- Thread UNI - ISO 228/1 CL.B

CHARACTERISTICS: conforming to regulation ROHS2 2011/65/EU and the transport of drinking water according to DM 174 06-04-04.
This rule defines the minimum outside diameter of the socket and does not provide tolerance. Pipe sealing is checked either by hydraulic test or by current Foucault test according to SEP 1925/PRP 02.74.
USE: suitable for connecting two pipes.

CODICE	F	Ød1 [mm]	A [mm]	B [mm]		€ Each
26825	1/2"	19	60	16	100	**3,96**
26828	3/4"	24,5	60	25	100	**4,02**

280-Z

02RACZI

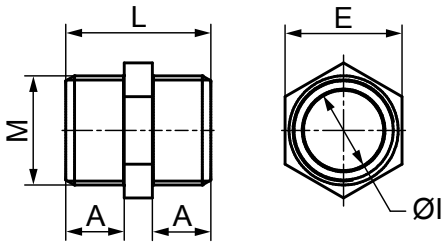

Galvanized double screw with M-M thread

- Material: steel C4C EN 10263
- Thread UNI - ISO 228/1 CL.B
- Electrolytic galvanizing UNI ISO 2081:2018th. 6 ÷ 9 [µm]

CHARACTERISTICS: conforming to regulation ROHS2 2011/65/EU and the transport of drinking water according to DM 174 06-04-04.
USE: suitable for connecting two pipes.

CODICE	M	A [mm]	E [mm]	L [mm]	ØI [mm]		€ Each
28001	1/8"	10	14	25	6	10	**1,87**
28002	1/4"	10	15	24,5	8	10	**0,93**
28003	3/8"	11,5	19	29	11	100	**0,81**
28004	1/2"	13	22	32,5	13,5	100	**1,01**
28005	3/4"	13,5	27	33,5	19	100	**1,28**
28006	1"	14	34	34,5	24	100	**2,67**
28007	1.1/4"	16	42	39	32	50	**12,50**
28008	1.1/2"	18	50	43	39	50	**28,00**
28009	2"	18	60	43	48	25	**35,09**

Oteraccordi S.p.A. reserves the right to change the information contained in this catalogue without notice.

290-Z

02RACZI

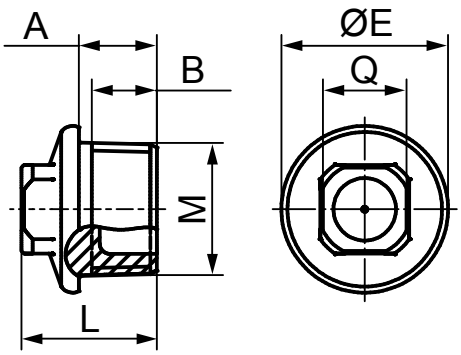

Squared nut plug with M thread

- Material: acciaio C4C EN 10263
- Conic thread UNI339 ISO R7
- Electrolytic galvanizing UNI ISO 2081:2018th. 6 ÷ 9 [µm]

CHARACTERISTICS: conforming to regulation ROHS2 2011/65/EU and the transport of drinking water according to DM 174 06-04-04 conic thread.
USE: suitable for closing pipes.

CODICE	M	A [mm]	B [mm]	L [mm]	ØE [mm]	Q [mm]		€ Each
29002	1/4"	12	10	19	15	9	10	**0,78**
29003	3/8"	12	10	21	21	10	100	**0,83**
29004	1/2"	13	11	22	25	12	100	**0,89**
29005	3/4"	15	12,5	26	32	17	100	**1,36**
29006	1"	16	13	28	40	19	100	**2,14**

292-Z

02RACZI

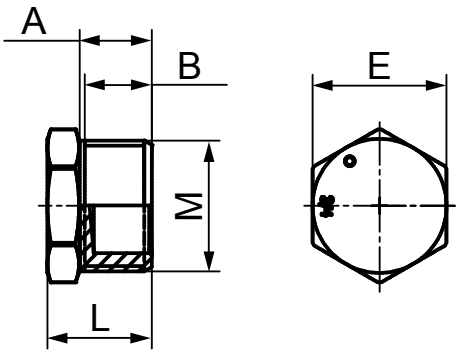

Hexagonal plug with M thread

- Material: steel C4C EN 10263
- Thread UNI - ISO 228/1 CL.B
- Electrolytic galvanizing UNI ISO 2081:2018th. 6 ÷ 9 [µm]

CHARACTERISTICS: conforming to regulation ROHS2 2011/65/EU and the transport of drinking water according to DM 174 06-04-04.
USE: suitable for closing pipes.

CODICE	M	A [mm]	B [mm]	E [mm]	L [mm]		€ Each
29201	1/8"	10	9	14	14	10	**1,44**
29202	1/4"	10,5	10	15	15,5	10	**0,68**
29203	3/8"	11,3	10,5	19	17,5	100	**0,70**
29204	1/2"	13,5	12,5	22	20	100	**0,78**
29205	3/4"	14,5	13,5	27	21	100	**1,12**
29206	1"	14	12	34	21	100	**2,10**
29207	1.1/4"	16	14	42	23	50	**14,74**
29208	1.1/2"	18	16	50	25	50	**24,58**
29209	2"	18	16	60	25	25	**25,98**

Oteraccordi S.p.A. reserves the right to change the information contained in this catalogue without notice.

300-Z

02RACZI

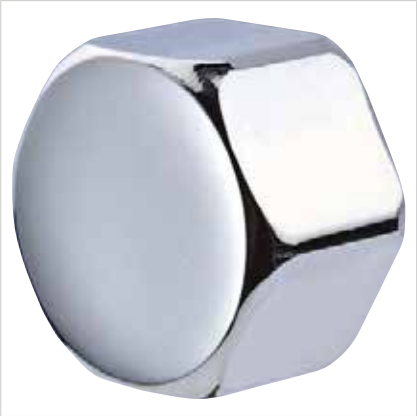

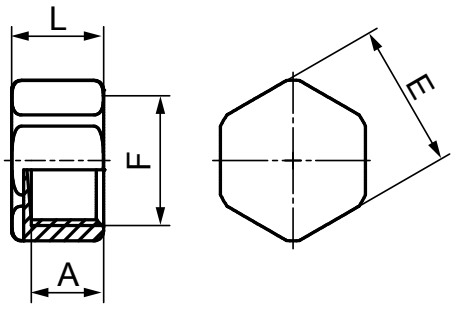

Hexagonal plug with F thread

- Material: acciaio C4C EN 10263
- Thread UNI - ISO 228/1 CL.B
- Electrolytic galvanizing UNI ISO 2081:2018th. 6 ÷ 9 [µm]

CHARACTERISTICS: conforming to regulation ROHS2 2011/65/EU and the transport of drinking water according to DM 174 06-04-04.
USE: suitable for closing two pipes.

CODICE	F	A [mm]	E [mm]	L [mm]		€ Each
30001	1/8"	7	14	12	10	**1,34**
30002	1/4"	10,5	20	15	10	**0,82**
30003	3/8"	10,5	20	15	100	**0,81**
30004	1/2"	12,5	24	17	100	**0,83**
30005	3/4"	14,5	30	19	100	**1,10**
30006	1"	16	38	22	100	**2,77**
30007	1.1/4"	16	50	22,5	50	**16,64**
30008	1.1/2"	16	60	22,5	50	**20,99**

Oteraccordi S.p.A. reserves the right to change the information contained in this catalogue without notice.

02RACZI

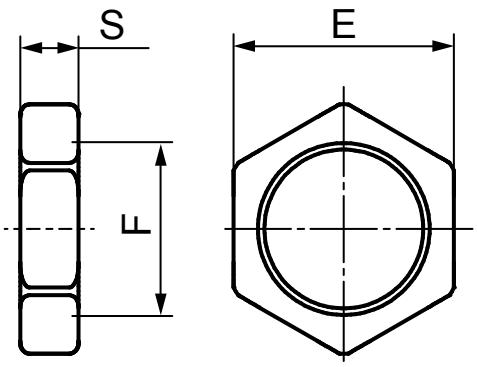

Lock nut

- Material: steel C4C EN 10263
- Thread UNI - ISO 228/1 CL.B
- Electrolytic galvanizing UNI ISO 2081:2018th. 6 ÷ 9 [µm]

CHARACTERISTICS: conforming to regulation ROHS2 2011/65/EU and the transport of drinking water according to DM 174 06-04-04.
USE: suitable for connecting two pipes.

CODICE	F	E [mm]	S [mm]		€ Each
31001	1/8"	17	5	10	**2,02**
31002	1/4"	19	5	10	**1,38**
31003	3/8"	22	7,5	100	**0,93**
31004	1/2"	27	8	100	**1,25**
31005	3/4"	34	9	100	**1,96**
31006	1"	42	10	100	**5,25**
31007	1.1/4"	50	10	50	**11,23**
31008	1.1/2"	60	10	50	**12,63**

Oteraccordi S.p.A. reserves the right to change the information contained in this catalogue without notice.

529-Z

02RACZI

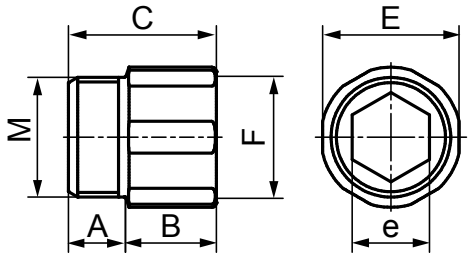

Galvanized socket with M-F thread

- Material: steel C4C EN 10263
- Thread UNI - ISO 228/1 CL.B
- Electrolytic galvanizing UNI ISO 2081:2018th. 6 ÷ 9 [µm]

CHARACTERISTICS: conforming to regulation ROHS2 2011/65/EU and the transport of drinking water according to DM 174 06-04-04.
USE: suitable for connecting two pipes.

CODICE	A [mm]	MxFxB [mm]	C [mm]	E [mm]	e [mm]		€ Each
52901	10	1/4"x15	25	20	8	10	**1,91**
52902	10	3/8"x10	22	20	9	100	**0,72**
52903	10	3/8"x15	25	20	9	100	**0,76**
52904	10	3/8"x20	30	20	9	100	**0,87**
52905	10	3/8"x25	35	20	9	100	**1,16**
52906	10	3/8"x30	40	20	9	100	**1,23**
52907	10	3/8"x35	45	20	9	100	**2,02**
52908	10	3/8"x40	50	20	9	100	**2,52**
52909	10	3/8"x50	60	20	9	100	**3,18**
52910	11,5	1/2"x10	23,5	24	12	100	**0,68**
52911	11,5	1/2"x15	26,5	24	12	100	**0,69**
52912	11,5	1/2"x20	31,5	24	12	100	**0,81**
52913	11,5	1/2"x25	36,5	24	12	100	**1,09**
52914	11,5	1/2"x30	41,5	24	12	100	**1,19**
52915	11,5	1/2"x35	46,5	24	12	100	**2,46**
52916	11,5	1/2"x40	51,5	24	12	100	**2,52**
52917	11,5	1/2"x50	61,5	24	12	100	**2,61**
52918	12,5	3/4"x10	24,5	30	17	100	**1,30**
52919	12,5	3/4"x15	27,5	30	17	100	**1,37**
52920	12,5	3/4"x20	32,5	30	17	100	**1,52**
52921	12,5	3/4"x25	37,5	30	17	100	**1,93**
52922	12,5	3/4"x30	42,5	30	17	100	**2,08**
52923	12,5	3/4"x35	47,5	30	17	100	**2,37**
52924	12,5	3/4"x40	52,5	30	17	100	**4,48**
52925	12,5	3/4"x50	62,5	30	17	100	**5,14**
52926	15	1"x15	30	38	19	25	**3,84**
52927	15	1"x20	35	38	19	25	**4,06**
52928	15	1"x25	40	38	19	25	**4,97**
52929	15	1"x30	45	38	19	25	**5,28**
52930	15	1"x40	55	38	19	25	**6,59**
52931	15	1"x50	65	38	19	25	**7,74**
52932	15	1.1/4"x20	33	50	32	25	**13,89**

Oteraccordi S.p.A. reserves the right to change the information contained in this catalogue without notice.

531-Z

02RACZI

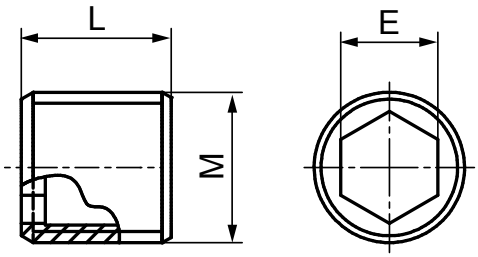

GALVANIZED SCREW WITH M THREAD

- Material: steel C4C EN 10263
- Thread UNI - ISO 228/1 CL.B
- Electrolytic galvanizing UNI ISO 2081:2018th. 6 ÷ 9 [µm]

CHARACTERISTICS: conforming to regulation ROHS2 2011/65/EU and the transport of drinking water according to DM 174 06-04-04.
USE: suitable for connecting two pipes.

CODICE	M	E [mm]	L [mm]		€ Each
53102	1/4"	8	19,5	10	**1,60**
53103	3/8"	9	22	100	**1,89**
53104	1/2"	13	25	100	**0,78**
53105	3/4"	16	25	100	**1,28**
53106	1"	20	30	100	**2,22**
53107	1.1/4"	31,5	40	10	**3,29**
53108	1.1/2"	37,5	42	10	**3,63**
53109	2"	49	43	10	**8,36**

Oteraccordi S.p.A. reserves the right to change the information contained in this catalogue without notice.

631

04TROVP

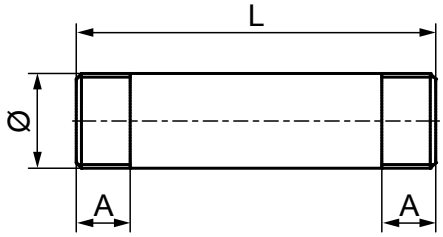

Black threaded extension

- Material: welded pipe UNI EN 10255
- Thread UNI - ISO 228/1 CL.B
- From 3/8" to 2" the pipe is light version
- From 2.1/2" to 6" the pipe is in medium version

CHARACTERISTICS: steel pipes suitable for welding and threading used in installation for transport and distribution of gas and fuels used for heating and air conditioning systems .Steel pipes not suitable for transport of drinking water for human use.
USE: It allows the union and the extension of two pipes.

CODICE	ØxL [mm]	A [mm]	mm		€ Each
631101	3/8"x50	9	2	20	2,51
631104	3/8"x80	9	2	20	2,58
631105	3/8"x100	13	2	20	2,63
631107	3/8"x150	13	2	20	3,30
631108	3/8"x200	13	2	20	3,92
631109	3/8"x250	13	2	20	5,35
631110	3/8"x300	13	2	20	6,02
631201	1/2"x50	11	2,3	20	1,69
631204	1/2"x80	11	2,3	20	1,82
631205	1/2"x100	15	2,3	20	1,84
631207	1/2"x150	15	2,3	20	2,36
631208	1/2"x200	15	2,3	20	3,09
631209	1/2"x250	15	2,3	20	4,15
631210	1/2"x300	15	2,3	20	4,69
631301	3/4"x50	10	2,3	20	1,74
631304	3/4"x80	10	2,3	20	2,05
631305	3/4"x100	15	2,3	20	2,12
631307	3/4"x150	15	2,3	20	2,75
631308	3/4"x200	15	2,3	10	3,55
631309	3/4"x250	15	2,3	10	4,86
631310	3/4"x300	15	2,3	10	5,48
631401	1"x50	12	2,9	20	2,35
631404	1"x80	12	2,9	20	2,67
631405	1"x100	20	2,9	20	2,95
631407	1"x150	20	2,9	20	4,00
631408	1"x200	20	2,9	10	5,23
631409	1"x250	20	2,9	10	6,82
631410	1"x300	20	2,9	10	7,28
631501	1.1/4"x50	13	2,9	20	3,30
631504	1.1/4"x80	13	2,9	20	3,84
631505	1.1/4"x100	20	2,9	20	4,21
631507	1.1/4"x150	20	2,9	20	5,55
631508	1.1/4"x200	20	2,9	10	6,96
631509	1.1/4"x250	20	2,9	10	9,37
631510	1.1/4"x300	20	2,9	10	10,82
631601	1.1/2"x50	16	2,9	10	3,83
631604	1.1/2"x80	16	2,9	10	4,49
631605	1.1/2"x100	20	2,9	10	5,08
631607	1.1/2"x150	20	2,9	10	6,99
631608	1.1/2"x200	20	2,9	10	8,13
631609	1.1/2"x250	20	2,9	10	10,63
631610	1.1/2"x300	20	2,9	10	12,01

Oteraccordi S.p.A. reserves the right to change the information contained in this catalogue without notice.

CODICE	ØxL [mm]	A [mm]	mm		€ Each
631701	2"x50	16	3,2	10	**5,58**
631704	2"x80	16	3,2	10	**6,70**
631705	2"x100	22	3,2	10	**6,96**
631707	2"x150	22	3,2	10	**8,80**
631708	2"x200	22	3,2	5	**11,00**
631709	2"x250	22	3,2	5	**14,05**
631710	2"x300	22	3,2	5	**15,29**
631804	2.1/2"x80	20	3,6	5	**14,09**
631805	2.1/2"x100	25	3,6	5	**16,25**
631807	2.1/2"x150	25	3,6	5	**19,51**
631808	2.1/2"x200	25	3,6	5	**23,82**
631809	2.1/2"x250	25	3,6	5	**28,40**
631810	2.1/2"x300	25	3,6	5	**31,81**
631904	3"x80	20	4	5	**18,47**
631905	3"x100	22	4	5	**19,31**
631907	3"x150	22	4	5	**24,23**
631908	3"x200	22	4	5	**27,37**
631909	3"x250	22	4	5	**33,94**
631910	3"x300	22	4	5	**38,64**
631925	4"x100	25	4,5	4	**34,58**
631927	4"x150	25	4,5	4	**38,66**
631928	4"x200	25	4,5	4	**45,50**
631929	4"x250	25	4,5	4	**55,44**
631930	4"x300	25	4,5	4	**58,66**

for sizes not indicated in the table please contact the commercial office for minimum order and prices

Oteraccordi S.p.A. reserves the right to change the information contained in this catalogue without notice.

630-Z

04TROVP

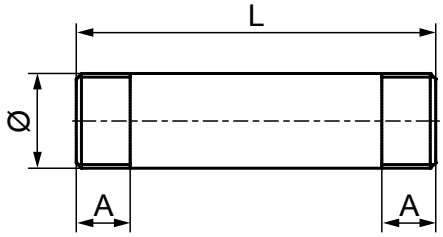

THREADED EXTENSION

- Material: welded pipe UNI EN 10255
- Thread UNI - ISO 228/1 CL.B
- From 3/8" to 2" the pipe is light version
- From 2.1/2" to 6" the pipe is in medium version

CHARACTERISTICS: Galvanizing conform EN 10240 A1 and DM 174 06-04-04 .Steel pipes suitable for welding and threading used in installation for transport and distribution of gas and fuels used for heating and air conditioning systems . Steel pipes not suitable for transport of drinking water for human use.
USE: It allows the union and the extension of two pipes.

CODICE	ØxL [mm]	A [mm]	mm		€ Each
630101	3/8"x50	9	2	20	2,49
630102	3/8"x60	9	2	20	2,33
630103	3/8"x70	9	2	20	2,39
630104	3/8"x80	9	2	20	2,63
630105	3/8"x100	13	2	20	2,89
630106	3/8"x120	13	2	20	3,12
630107	3/8"x150	13	2	20	3,59
630108	3/8"x200	13	2	20	4,24
630109	3/8"x250	13	2	20	5,90
630110	3/8"x300	13	2	20	7,51
630111	3/8"x400	13	2	10	8,72
630112	3/8"x500	13	2	10	11,97
630201	1/2"x50	11	2,3	20	1,78
630202	1/2"x60	11	2,3	20	1,78
630203	1/2"x70	11	2,3	20	1,81
630204	1/2"x80	11	2,3	20	1,81
630205	1/2"x100	15	2,3	20	2,02
630206	1/2"x120	15	2,3	20	2,39
630207	1/2"x150	15	2,3	20	2,69
630208	1/2"x200	15	2,3	20	3,46
630209	1/2"x250	15	2,3	20	4,50
630210	1/2"x300	15	2,3	20	5,17
630211	1/2"x400	15	2,3	10	6,96
630212	1/2"x500	15	2,3	10	8,58
630213	1/2"x600	15	2,3	10	12,24
630214	1/2"x700	15	2,3	5	14,73
630215	1/2"x800	15	2,3	5	16,53
630216	1/2"x1000	15	2,3	5	19,80
630217	1/2"x1500	15	2,3	3	31,95
630218	1/2"x2000	15	2,3	3	40,99
630301	3/4"x50	10	2,3	20	2,08
630302	3/4"x60	10	2,3	20	2,02
630303	3/4"x70	10	2,3	20	2,14
630304	3/4"x80	10	2,3	20	2,25
630305	3/4"x100	15	2,3	20	2,70
630306	3/4"x120	15	2,3	20	2,95
630307	3/4"x150	15	2,3	20	3,36
630308	3/4"x200	15	2,3	10	4,48
630309	3/4"x250	15	2,3	10	5,35
630310	3/4"x300	15	2,3	10	7,08

Oteraccordi S.p.A. reserves the right to change the information contained in this catalogue without notice.

CODICE	ØxL [mm]	A [mm]	mm		€ Each
630311	3/4"x400	15	2,3	10	9,28
630312	3/4"x500	15	2,3	10	10,28
630313	3/4"x600	15	2,3	10	15,71
630314	3/4"x700	15	2,3	5	18,95
630315	3/4"x800	15	2,3	5	20,70
630316	3/4"x1000	15	2,3	5	23,81
630317	3/4"x1500	15	2,3	3	36,22
630318	3/4"x2000	15	2,3	3	50,48
630401	1"x50	12	2,9	20	2,76
630402	1"x60	12	2,9	20	2,76
630403	1"x70	12	2,9	20	3,06
630404	1"x80	12	2,9	20	3,29
630405	1"x100	20	2,9	20	3,54
630406	1"x120	20	2,9	20	4,19
630407	1"x150	20	2,9	20	4,60
630408	1"x200	20	2,9	10	5,91
630409	1"x250	20	2,9	10	8,26
630410	1"x300	20	2,9	10	9,12
630411	1"x400	20	2,9	10	12,41
630412	1"x500	20	2,9	10	15,90
630413	1"x600	20	2,9	10	21,06
630414	1"x700	20	2,9	5	28,08
630415	1"x800	20	2,9	5	31,74
630416	1"x1000	20	2,9	3	36,56
630417	1"x1500	20	2,9	3	56,35
630418	1"x2000	20	2,9	3	72,15
630501	1.1/4"x50	13	2,9	20	3,89
630502	1.1/4"x60	13	2,9	20	3,70
630503	1.1/4"x70	13	2,9	20	4,00
630504	1.1/4"x80	13	2,9	20	4,23
630505	1.1/4"x100	20	2,9	20	5,17
630506	1.1/4"x120	20	2,9	20	5,40
630507	1.1/4"x150	20	2,9	20	6,76
630508	1.1/4"x200	20	2,9	20	8,13
630509	1.1/4"x250	20	2,9	10	10,84
630510	1.1/4"x300	20	2,9	10	12,48
630511	1.1/4"x400	20	2,9	5	16,74
630512	1.1/4"x500	20	2,9	5	20,26
630516	1.1/4"x1000	20	2,9	3	50,02
630517	1.1/4"x1500	20	2,9	3	71,68
630518	1.1/4"x2000	20	2,9	3	88,09
630601	1.1/2"x50	16	2,9	10	4,76
630602	1.1/2"x60	16	2,9	10	4,66
630603	1.1/2"x70	16	2,9	10	4,83
630604	1.1/2"x80	16	2,9	10	5,10
630605	1.1/2"x100	20	2,9	10	5,29
630606	1.1/2"x120	20	2,9	10	6,93
630607	1.1/2"x150	20	2,9	10	7,53
630608	1.1/2"x200	20	2,9	10	9,21
630609	1.1/2"x250	20	2,9	10	12,48
630610	1.1/2"x300	20	2,9	10	14,29
630611	1.1/2"x400	20	2,9	5	19,33
630612	1.1/2"x500	20	2,9	5	23,76
630616	1.1/2"x1000	20	2,9	3	53,42
630617	1.1/2"x1500	20	2,9	3	77,32
630618	1.1/2"x2000	20	2,9	3	94,70
630701	2"x50	16	3,2	10	5,83
630702	2"x60	16	3,2	10	6,04
630703	2"x70	16	3,2	10	6,82
630704	2"x80	16	3,2	10	7,34
630705	2"x100	22	3,2	10	7,46
630706	2"x120	22	3,2	10	8,62
630707	2"x150	22	3,2	10	9,61
630708	2"x200	22	3,2	5	12,27
630709	2"x250	22	3,2	5	15,75
630710	2"x300	22	3,2	5	20,62
630711	2"x400	22	3,2	5	25,61

Oteraccordi S.p.A. reserves the right to change the information contained in this catalogue without notice.

CODICE	ØxL [mm]	A [mm]	mm		€ Each
630712	2"x500	22	3,2	5	34,54
630716	2"x1000	23	3,2	3	73,03
630717	2"x1500	23	3,2	3	101,52
630718	2"x2000	23	3,2	3	115,34
630804	2.1/2"x80	20	3,6	5	15,76
630805	2.1/2"x100	25	3,6	5	15,55
630806	2.1/2"x120	25	3,6	5	18,85
630807	2.1/2"x150	25	3,6	5	20,71
630808	2.1/2"x200	25	3,6	5	25,82
630809	2.1/2"x250	25	3,6	5	28,13
630810	2.1/2"x300	25	3,6	5	32,92
630811	2.1/2"x400	25	3,6	5	41,88
630812	2.1/2"x500	25	3,6	5	53,26
630904	3"x80	20	4	5	19,69
630905	3"x100	25	4	5	20,73
630906	3"x120	25	4	5	25,36
630907	3"x150	25	4	5	26,63
630908	3"x200	25	4	5	31,41
630909	3"x250	25	4	5	37,69
630910	3"x300	25	4	5	42,91
630911	3"x400	25	4	3	54,42
630912	3"x500	25	4	3	69,82
630925	4"x100	25	4,5	4	35,85
630926	4"x120	25	4,5	4	39,27
630927	4"x150	25	4,5	4	44,32
630928	4"x200	25	4,5	4	48,89
630929	4"x250	25	4,5	4	54,74
630930	4"x300	25	4,5	4	67,79
630931	4"x400	25	4,5	4	94,21
630932	4"x500	25	4,5	3	111,66

for sizes not indicated in the table please contact the commercial office for minimum order and prices

Oteraccordi S.p.A. reserves the right to change the information contained in this catalogue without notice.

632-Z

04TROVP

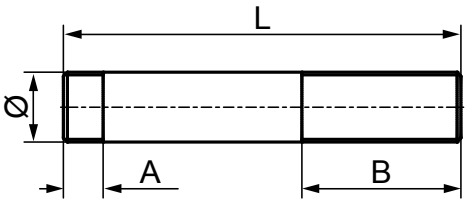

GALVANIZED LONG THREADED EXTENSION

- Material: welded pipe UNI EN 10255
- Thread UNI - ISO 228/1 CL.B
- From 3/8" to 2" the pipe is light version
- From 2.1/2" to 6" the pipe is in medium version

CHARACTERISTICS: Galvanizing conform EN 10240 A1 and DM 174 06-04-04 steel pipes suitable for welding and threading used in installation for transport and distribution of gas and fuels used for heating and air conditioning systems .Steel pipes not suitable for transport of drinking water for human use.
USE: It allows the union and the extension of two pipes.

CODICE	ØxL [mm]	A [mm]	mm	B [mm]		€ Each
632205	1/2"x100	15	2,3	50	20	**4,26**
632207	1/2"x150	15	2,3	60	20	**4,60**
632208	1/2"x200	15	2,3	60	20	**5,57**
632305	3/4"x100	15	2,3	50	20	**4,60**
632307	3/4"x150	15	2,3	60	20	**6,05**
632308	3/4"x200	15	2,3	60	10	**7,68**
632405	1"x100	20	2,9	50	20	**6,84**
632407	1"x150	20	2,9	70	20	**8,03**
632408	1"x200	20	2,9	70	10	**10,07**
632505	1.1/4"x100	20	2,9	50	20	**9,72**
632507	1.1/4"x150	20	2,9	70	20	**11,61**
632508	1.1/4"x200	20	2,9	70	10	**13,13**
632605	1.1/2"x100	20	2,9	50	10	**10,24**
632607	1.1/2"x150	20	2,9	70	10	**12,46**
632608	1.1/2"x200	20	2,9	70	10	**14,18**
632705	2"x100	22	3,2	50	10	**12,12**
632707	2"x150	23	3,2	80	10	**15,37**
632708	2"x200	23	3,2	80	5	**16,33**

for sizes not indicated in the table please contact the commercial office for minimum order and prices

Oteraccordi S.p.A. reserves the right to change the information contained in this catalogue without notice.

650-N

04TROVP

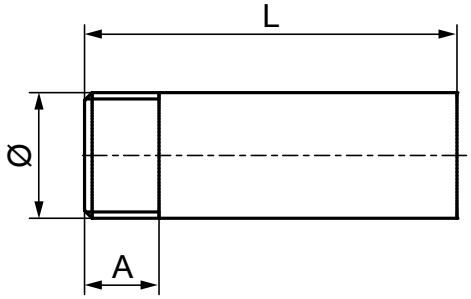

Black extension one side thread

- Materiale: welded pipe UNI EN 10255
- Thread UNI - ISO 228/1 CL.B
- From 3/8" to 2" the pipe is in light version
- From 2.1/2" to 6" the pipe is in medium version.

CHARACTERISTICS: steel pipes suitable for welding and threading used in installation for transport and distribution of gas and fuels used for heating and air conditioning systems .Steel pipes not suitable for transport of drinking water for human use.
USE: It allows the union and the extension of two pipes.

CODICE	ØxL [mm]	A [mm]	mm		€ Each
650101	3/8"x50	10	2	20	1,70
650104	3/8"x80	10	2	20	1,78
650105	3/8"x100	13	2	20	1,98
650107	3/8"x150	13	2	20	2,82
650108	3/8"x200	13	2	20	3,58
650109	3/8"x250	13	2	20	4,37
650110	3/8"x300	13	2	20	6,02
650201	1/2"x50	12	2,3	20	1,59
650204	1/2"x80	12	2,3	20	1,73
650205	1/2"x100	15	2,3	20	1,85
650207	1/2"x150	15	2,3	20	2,70
650208	1/2"x200	15	2,3	20	3,18
650209	1/2"x250	15	2,3	20	3,98
650210	1/2"x300	15	2,3	20	4,67
650301	3/4"x50	11	2,3	20	1,98
650304	3/4"x80	11	2,3	20	2,14
650305	3/4"x100	15	2,3	20	2,22
650307	3/4"x150	15	2,3	20	2,95
650308	3/4"x200	15	2,3	10	3,72
650309	3/4"x250	15	2,3	10	4,67
650310	3/4"x300	15	2,3	10	5,58
650401	1"x50	14	2,9	20	2,38
650404	1"x80	14	2,9	20	2,73
650405	1"x100	20	2,9	20	3,36
650407	1"x150	20	2,9	20	4,59
650408	1"x200	20	2,9	10	5,82
650409	1"x250	20	2,9	10	7,41
650410	1"x300	20	2,9	10	7,71
650501	1.1/4"x50	16	2,9	20	3,55
650504	1.1/4"x80	16	2,9	20	4,39
650505	1.1/4"x100	20	2,9	20	4,76
650507	1.1/4"x150	20	2,9	20	6,36
650508	1.1/4"x200	20	2,9	10	7,92
650509	1.1/4"x250	20	2,9	10	10,51
650510	1.1/4"x300	20	2,9	10	10,50
650601	1.1/2"x50	16	2,9	10	3,87
650604	1.1/2"x80	16	2,9	10	4,83
650605	1.1/2"x100	20	2,9	10	5,81
650607	1.1/2"x150	20	2,9	10	7,28
650608	1.1/2"x200	20	2,9	10	9,04
650609	1.1/2"x250	20	2,9	10	11,12
650610	1.1/2"x300	20	2,9	10	12,25

Oteraccordi S.p.A. reserves the right to change the information contained in this catalogue without notice.

CODICE	ØxL [mm]	A [mm]	mm		€ Each
650701	2"x50	20	3,2	10	**5,07**
650704	2"x80	20	3,2	10	**5,91**
650705	2"x100	22	3,2	10	**6,73**
650707	2"x150	22	3,2	10	**9,19**
650708	2"x200	22	3,2	5	**12,15**
650804	2.1/2"x80	23	3,6	5	**14,38**
650805	2.1/2"x100	25	3,6	5	**15,67**
650807	2.1/2"x150	25	3,6	5	**18,32**
650808	2.1/2"x200	25	3,6	5	**23,80**
650904	3"x80	23	4	5	**17,48**
650905	3"x100	25	4	5	**18,16**
650907	3"x150	25	4	5	**21,64**
650908	3"x200	25	4	5	**28,92**
650924	4"x80	25	4,5	4	**27,60**
650925	4"x100	25	4,5	4	**30,66**
650927	4"x150	25	4,5	4	**36,43**
650928	4"x200	25	4,5	4	**43,11**

for sizes not indicated in the table please contact the commercial office for minimum order and prices

Oteraccordi S.p.A. reserves the right to change the information contained in this catalogue without notice.

note

WELDING
FITTINGS

AQUAOTER

05RACSA

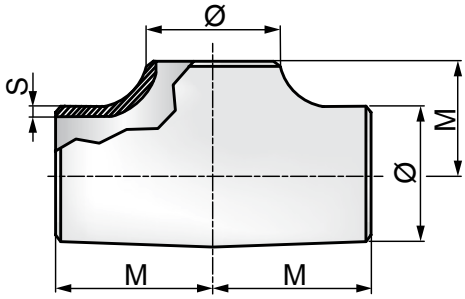

WELDING TEE CONNECTION

- Material: S235JR EN 10025

CHARACTERISTICS: dimensional rule UNI EN 10253-1.
USE: suitable for the T-junction of pipes for the confluence of two flows into one or to the partition of a flow into two different ones .

CODICE	DN	∅ [inch]	∅ [mm]	M [mm]	S [mm]	kg		€ Each
70003	25	1"	33,7	38	2,6	0,26	1	**28,24**
70004	32	1.1/4"	42,4	48	2,6	0,5	1	**30,80**
70005	40	1.1/2"	48,3	57	2,6	0,66	1	**38,51**
70007	50	2"	60,3	64	2,9	0,96	1	**46,22**
70009	65	2.1/2"	76,1	76	2,9	1,5	1	**77,03**
70010	80	3"	88,9	86	3,2	2	1	**100,25**
70013	100	4"	114,3	105	3,6	3,5	1	**141,82**
70015	125	5"	139,7	124	4	6,5	1	**186,67**
70017	150	6"	168,3	143	4,5	9	1	**269,38**
70019	200	8"	219,1	178	6,3	18	1	**700,39**
70021	250	10"	273	216	6,3	26,5	1	**1470,34**
70022	300	12"	323,8	254	7,1	42	1	**2035,59**

For not indicated sizes please contact our offices for minimum order and prices- SR: price on demand

720

05RACSA

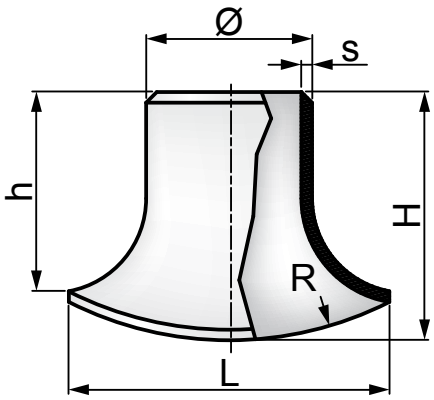

Connection made from seamless pipe

- Material: S235JR EN 10025

CHARACTERISTICS: made from seamless pipe UNI EN 10216-1. Dimensional rule UNI EN 10253-1.
USE: suitable for creating derivations from pipes

CODICE	∅ [inch]	∅ [mm]	h [mm]	H [mm]	L [mm]	R [mm]	kg		s [mm]	€ Each
72002	3/4"	26,9	29	38	43	32	0,07	1	2,6	**28,81**
72003	1"	33,7	40	50	53	42	0,09	1	3,2	**33,19**
72004	1.1/4"	42,4	38	50	67	55	0,15	1	3,2	**36,65**
72005	1.1/2"	48,3	48	64	76	60	0,23	1	3,2	**50,28**
72007	2"	60,3	58	76	96	77	0,42	1	3,6	**55,13**
72008	-	70	51	70	112	92	0,38	1	3,6	**68,10**
72009	2.1/2"	76,1	68	88	121	100	0,66	1	3,6	**72,10**
72010	3"	88,9	65	88	142	122	0,8	1	4	**110,17**
72011	3.1/2"	101,6	65	91	161	138	0,9	1	4	**128,47**
72012	-	108	68	97	172	144	1	1	4	**137,94**
72013	4"	114,3	74	102	182	160	1,6	1	4	**182,59**
72014	-	133	83	119	213	174	1,9	1	4	**224,49**
72015	5"	139,7	87	125	222	182	2,4	1	4,5	**287,34**
72016	-	159	100	143	254	212	2,95	1	4,5	**344,21**
72017	6"	168,3	107	151	268	224	4,3	1	5,4	**773,23**
72018	-	193,7	122	174	309	258	6	1	6,3	**823,11**
72019	8"	219,1	137	197	355	295	7,5	1	6,3	**0,00**
72022	12"	323,9	180	275	537	436	22	1	8	**0,00**

N.B. item available till stocks last

Oteraccordi S.p.A. reserves the right to change the information contained in this catalogue without notice.

05RACSA

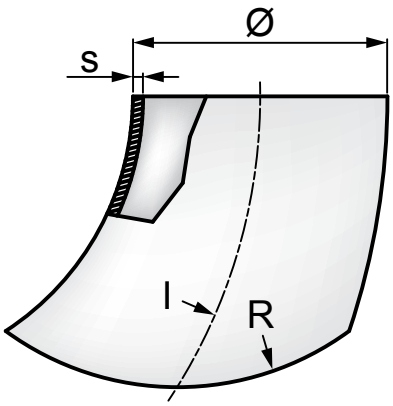

SADDLE ELBOW MADE FROM SEAMLESS PIPE

- Material: S235JR EN 10025

CHARACTERISTICS: made from seamless pipe UNI EN 10216-1. Dimensional rule UNI EN 10253-1.
USE:suitable for creating derivations from pipes.

CODICE	∅ [inch]	∅ [mm]	l [mm]	R [mm]	kg		s [mm]	€ Each
73004	1.1/4"	42,4	47,5	48	0,14	1	2,6	**55,12**
73005	1.1/2"	48,3	57	57	0,19	1	2,6	**59,52**
73007	2"	60,3	76	76	0,37	1	2,9	**68,35**
73008	-	70	92	92	0,52	1	2,9	**90,39**
73009	2.1/2"	76,1	95	95	0,59	1	2,9	**92,60**
73010	3"	88,9	114,5	114	0,91	1	3,2	**110,24**
73011	3.1/2"	101,6	133,5	133	1,38	1	3,6	**180,78**
73012	-	108	142,5	142	1,56	1	3,6	**187,41**
73013	4"	114,3	152,5	152	1,77	1	3,6	**220,48**
73014	-	133	181	181	2,73	1	4	**330,73**
73015	5"	139,7	190,5	190	3,03	1	4	**363,78**
73016	-	159	216	216	4,35	1	4,5	**562,23**
73017	6"	168,3	228,5	228	4,87	1	4,5	**606,31**
73018	-	193,7	270	270	7,5	1	5,4	**970,08**
73019	8"	219,1	305	305	11,2	1	6,3	**1322,85**
73021	10"	273	381	381	19	1	6,3	**2598,98**
73022	12"	323,9	457	457	30	1	7,1	**2.960,73**

N.B.item available till stocks last

Oteraccordi S.p.A. reserves the right to change the information contained in this catalogue without notice.

740

05RACSA

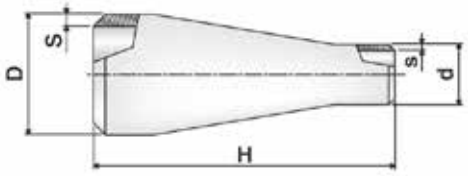

Concentric reducer made from seamless pipe

• Material: S235JR EN 10025

CHARACTERISTICS: made from seamless pipe UNI EN 10216-1. Dimensional rule UNI EN 10253-1.
USE: suitable for the junction head to head pipes with different diameters.

CODICE	Dxd[inch]	Dxd[mm]	H [mm]	S [mm]	kg		s [mm]	€ Each
74001	1"x3/4"	33,7x26,90	50	2,6	0,09	1	2,3	**10,81**
74002	1.1/4"x3/4"	42,4x26,90	50	2,6	0,13	1	2,3	**11,92**
74003	1.1/4"x1"	42,4x33,70	50	2,6	0,14	1	2,6	**10,70**
74004	1.1/2"x3/4"	48,3x26,90	64	2,6	0,19	1	2,3	**15,77**
74005	1.1/2"x1"	48,3x33,70	64	2,6	0,2	1	2,6	**13,02**
74006	1.1/2"x1.1/4"	48,3x42,40	64	2,6	0,2	1	2,6	**11,34**
74007	2"x1"	60,3x33,70	76	2,9	0,31	1	2,6	**16,55**
74008	2"x1.1/4"	60,3x42,40	76	2,9	0,32	1	2,6	**14,66**
74009	2"x1.1/2"	60,3x48,30	76	2,9	0,33	1	2,6	**12,69**
74010	2.1/2"x1.1/4"	76,1x42,40	90	2,9	0,47	1	2,6	**19,51**
74011	2.1/2"x1.1/2"	76,1x48,30	90	2,9	0,48	1	2,6	**17,42**
74012	2.1/2"x2"	76,1x60,30	90	2,9	0,49	1	2,9	**16,21**
74013	3"x1.1/4"	88,9x42,40	90	3,2	0,55	1	2,6	**40,12**
74014	3"x1.1/2"	88,9x48,30	90	3,2	0,61	1	2,6	**28,90**
74015	3"x2"	88,9x60,30	90	3,2	0,62	1	2,9	**22,95**
74016	-	88,9x70,00	68	3,2	0,62	1	2,9	**22,04**
74017	3"x2.1/2"	88,9x76,10	90	3,2	0,63	1	2,9	**18,52**
74018	3.1/2"x2.1/2"	101,6x76,10	80	3,6	0,69	1	2,9	**35,56**
74019	3.1/2"x3"	101,6x88,90	56	3,6	0,5	1	3,2	**32,25**
74020	-	108,0x60,30	122	3,6	1,07	1	2,9	**50,53**
74021	4"x2"	114,3x60,30	100	3,6	0,98	1	2,9	**51,56**
74022	4"x2.1/2"	114,3x76,10	100	3,6	1	1	2,9	**40,47**
74023	4"x3"	114,3x88,90	100	3,6	1,02	1	3,2	**35,45**
74024	4"x3.1/2"	114,3x101,6	66	3,6	1,15	1	3,6	**33,60**
74025	-	133,0x76,10	147	4	1,95	1	2,9	**86,43**
74026	-	133,0x88,90	122	4	1,55	1	3,2	**84,60**
74027	-	133,0x108,0	80	4	1,06	1	3,6	**59,45**
74028	-	133,0x114,3	75	4	0,96	1	2,9	**59,45**
74029	5"x2.1/2"	139,7x76,10	127	4	1,7	1	3,2	**89,16**
74030	5"x3"	139,7x88,90	127	4	1,74	1	3,6	**84,87**
74031	-	139,7x108,0	99	4	1,74	1	3,6	**73,06**
74032	5"x4"	139,7x114,3	127	4	1,76	1	3,2	**64,22**
74033	-	159,0x88,90	172	4,5	3,08	1	3,6	**132,60**
74034	-	159,0x108,0	135	4,5	2,4	1	3,6	**119,18**
74035	-	159,0x114,3	124	4,5	2,4	1	4	**86,43**
74036	-	159,0x133,0	89	4,5	1,44	1	4	**79,34**
74037	-	159,0x139,7	60	4,5	1,03	1	3,2	**72,02**
74038	6"x3"	168,3x88,90	140	4,5	2,7	1	3,6	**129,62**
74039	6"x4"	168,3x114,3	140	4,5	2,82	1	4	**126,49**
74040	-	168,3x133,0	140	4,5	2,88	1	4	**76,82**
74041	6"x5"	168,3x139,7	140	4,5	2,94	1	4,5	**76,82**
74042	8"x4"	219,1x114,3	152	6,3	5,03	1	4	**207,05**
74043	-	219,1x133,0	180	6,3	5,03	1	4	**198,88**
74044	8"x5"	219,1x139,7	152	6,3	5,12	1	4,5	**160,37**

Oteraccordi S.p.A. reserves the right to change the information contained in this catalogue without notice.

CODICE	Dxd[inch]	Dxd[mm]	H [mm]	S [mm]	kg		s [mm]	€ Each
74045	-	219,1x159,0	140	6,3	5,15	1	4,5	**138,05**
74046	8"x6"	219,1x168,3	152	6,3	5,18	1	5,4	**138,05**
74047	10"x6"	273,0x168,3	178	6,3	7,4	1	5,4	**271,16**
74048	10"x8"	273,0x219,1	178	6,3	7,55	1	6,3	**253,48**
74049	12"x8"	323,9x219,1	203	7,1	11,1	1	6,3	**469,54**
74050	12"x10"	323,9x273,0	203	7,1	11,7	1	6,3	**465,55**

For not indicated sizes, please contact our offices for minimum order and prices

Oteraccordi S.p.A. reserves the right to change the information contained in this catalogue without notice.

750/90°

05RACSA

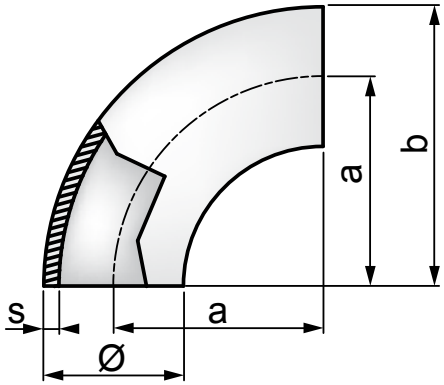

D3 Elbow 90°

- Material: S235JR EN 10025

CHARACTERISTICS: made from welded tube Fretz-Moon St 37.0.W. Dimensional rule UNI EN 10253-1.
USE: suitable to make 90 ° pipes derivations .

CODICE	DN	∅ [inch]	∅ [mm]	a [mm]	b [mm]	kg		s [mm]	€ Each
75002	20	3/4"	26,9	29	43	0,06	1	2,3	**4,99**
75003	25	1"	33,7	38	56	0,12	1	2,6	**4,14**
75004	32	1.1/4"	42,4	48	69	0,19	1	2,6	**5,01**
75005	40	1.1/2"	48,3	57	82	0,26	1	2,6	**6,06**
75007	50	2"	60,3	76	106	0,49	1	2,9	**9,99**
75009	65	2.1/2"	76,1	95	133	0,78	1	2,9	**15,93**
75010	80	3"	88,9	114	159	1,22	1	3,2	**23,24**
75011	90	3.1/2"	101,6	134	184	1,83	1	3,6	**31,81**
75012	-	-	108	143	196	2,08	1	3,6	**41,17**
75013	100	4"	114,3	152	210	2,36	1	3,6	**43,95**
75014	-	-	133	181	247	3,62	1	4	**72,22**
75015	125	5"	139,7	190	260	4	1	4	**73,70**
75016	-	-	159	216	294	5,8	1	4,5	**113,17**
75017	150	6"	168,3	229	313	6,5	1	4,5	**118,85**
75018	-	-	193,7	270	367	11	1	5,4	**237,39**
75019	200	8"	219,1	305	414	15,8	1	6,3	**281,15**
75021	250	10"	273	381	518	24,8	1	6,3	**562,30**
75022	300	12"	323,9	457	619	39,8	1	7,1	**869,55**

For not indicated sizes, please contact our offices for minimum order and prices

Oteraccordi S.p.A. reserves the right to change the information contained in this catalogue without notice.

751/90° SS

05RACSA

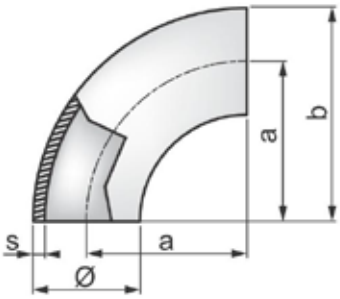

D3 Elbow 90° made from seamless pipe

- Material: S235JR EN 10025

CHARACTERISTICS: made from seamless pipe St 37.0.S. Dimensional rule UNI EN 10253-1.
USE: suitable to make 90 ° pipes derivations .

CODICE	DN	∅ [inch]	∅ [mm]	a [mm]	b [mm]	kg		s [mm]	€ Each
75101	15	1/2"	21,3	28	38	0,04	1	2	**5,16**
75102	20	3/4"	26,9	29	43	0,06	1	2,3	**5,16**
75103	25	1"	33,7	38	56	0,12	1	2,6	**4,97**
75104	32	1.1/4"	42,4	48	69	0,19	1	2,6	**5,86**
75105	40	1.1/2"	48,3	57	82	0,26	1	2,6	**7,24**
75107	50	2"	60,3	76	106	0,49	1	2,9	**11,10**
75108	-	-	70	92	127	0,7	1	2,9	**16,39**
75109	65	2.1/2"	76,1	95	133	0,78	1	2,9	**16,92**
75110	80	3"	88,9	114	159	1,22	1	3,2	**24,86**
75111	90	3.1/2"	101,6	134	184	1,83	1	3,6	**43,75**
75112	-	-	108	143	196	2,08	1	3,6	**43,95**
75113	100	4"	114,3	152	210	2,36	1	3,6	**46,79**
75114	-	-	133	181	247	3,62	1	4	**80,80**
75115	125	5"	139,7	190	260	4	1	4	**87,46**
75116	-	-	159	216	294	5,8	1	4,5	**114,78**
75117	150	6"	168,3	229	313	6,5	1	4,5	**125,53**
75118	-	-	193,7	270	367	11	1	5,6	**251,54**
75119	200	8"	219,1	305	414	15,8	1	6,3	**330,13**
75121	250	10"	273	381	518	24,8	1	6,3	**604,98**
75122	300	12"	323,9	457	619	39,8	1	7,1	**987,51**

For not indicated sizes, please contact our offices for minimum order and prices

Oteraccordi S.p.A. reserves the right to change the information contained in this catalogue without notice.

770

05RACSA

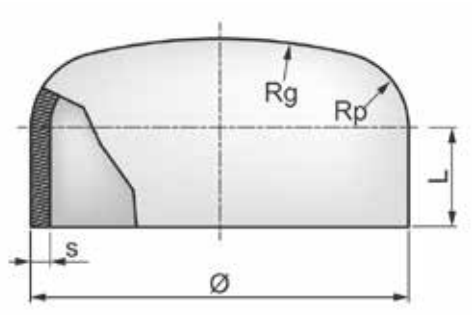

Convex cap

• Material: S235JR EN 10025

CHARACTERISTICS: the conformation of the dished ends allows a correct distribution of the stresses at the ends of the pressure hoses, without creating other additional stresses along the welding edge.
USE: This article is used to close tanks and pipes subject to internal pressure.

CODICE	∅ [inch]	∅ [mm]	h [mm]	H [mm]	R [mm]	r [mm]	kg		s [mm]	€ Each
77003	1"	33,7	5	13,6	34	4	0,03	1	2,3	**2,53**
77004	1.1/4"	42,4	5	13,6	43	4	0,05	1	2,6	**2,76**
77005	1.1/2"	48,3	6	14,1	48	4	0,06	1	2,6	**3,31**
77007	2"	60,3	7	19,4	60	6	0,12	1	2,9	**3,53**
77008	-	70	8	28	70	6	0,16	1	2,9	**6,06**
77009	2.1/2"	76,1	9	21,4	76	6	0,21	1	2,9	**5,29**
77010	3"	88,9	11	26,2	89	8	0,28	1	3,2	**6,50**
77011	3.1/2"	101,6	11	28,1	102	8	0,36	1	3,6	**17,30**
77012	-	108	11	29,1	108	8	0,39	1	3,6	**17,63**
77013	4"	114,3	12	29,6	114	8	0,46	1	3,6	**18,74**
77014	-	133	12	36	133	10	0,59	1	4	**24,25**
77015	5"	139,7	12	39,5	140	12	0,62	1	4	**34,17**
77016	-	159	15	47,5	159	15	1,11	1	4,5	**44,08**
77017	6"	168,3	16	40	168	15	1,23	1	4,5	**55,11**
77018	-	193,7	17	57	194	20	1,89	1	5,4	**88,17**
77019	8"	219,1	17	57	220	20	2,21	1	6,3	**96,98**
77020	-	244,5	17	60	240	25	3,16	1	6,3	**181,85**
77021	10"	273	18	70	270	28	3,67	1	6,3	**225,93**
77022	12"	323,9	35	87	324	32	6,3	1	7,1	**273,32**

Per misure non riportate in tabella rivolgersi all'ufficio commerciale per minimi di ordine e prezzi

Oteraccordi S.p.A. reserves the right to change the information contained in this catalogue without notice.

MAX PRESSURE [BAR]						
WELDING FITTINGS						
DM [mm]	Ø	Sp.	Artt. 750/751	Art. 700	Art. 770	Art. 740
15	21,3	2	90	-	-	-
20	26,9	2,3	90	-	-	-
25	33,7	2,6	90	60	100	100
32	42,4	2,6	90	50	100	100
40	48,3	2,6	90	40	90	100
50	60,3	2,9	70	40	80	90
-	70	2,9	70	-	70	-
65	76,1	2,9	60	30	70	80
80	88,9	3,2	60	30	60	80
90	101,6	3,6	60	-	60	70
-	108	3,6	60	-	50	70
100	114,3	3,6	50	20	50	70
-	133	4	50	-	50	60
125	139,7	4	50	20	40	60
-	159	4,5	50	-	40	60
150	168,3	4,5	50	20	40	60
-	193,7	5,6	50	-	40	-
200	219,1	6,3	50	20	40	60
-	244,5	6,3	-	-	40	-
250	273	6,3	40	15	30	50
300	323,9	7,1	40	15	30	50
350	355,6	8	-	15	-	-
400	406,4	8,8	-	15	-	-

NOTE:

Pmax [bar] indicative at 20 ° C carbon steel welding fittings.

note

FLANGES

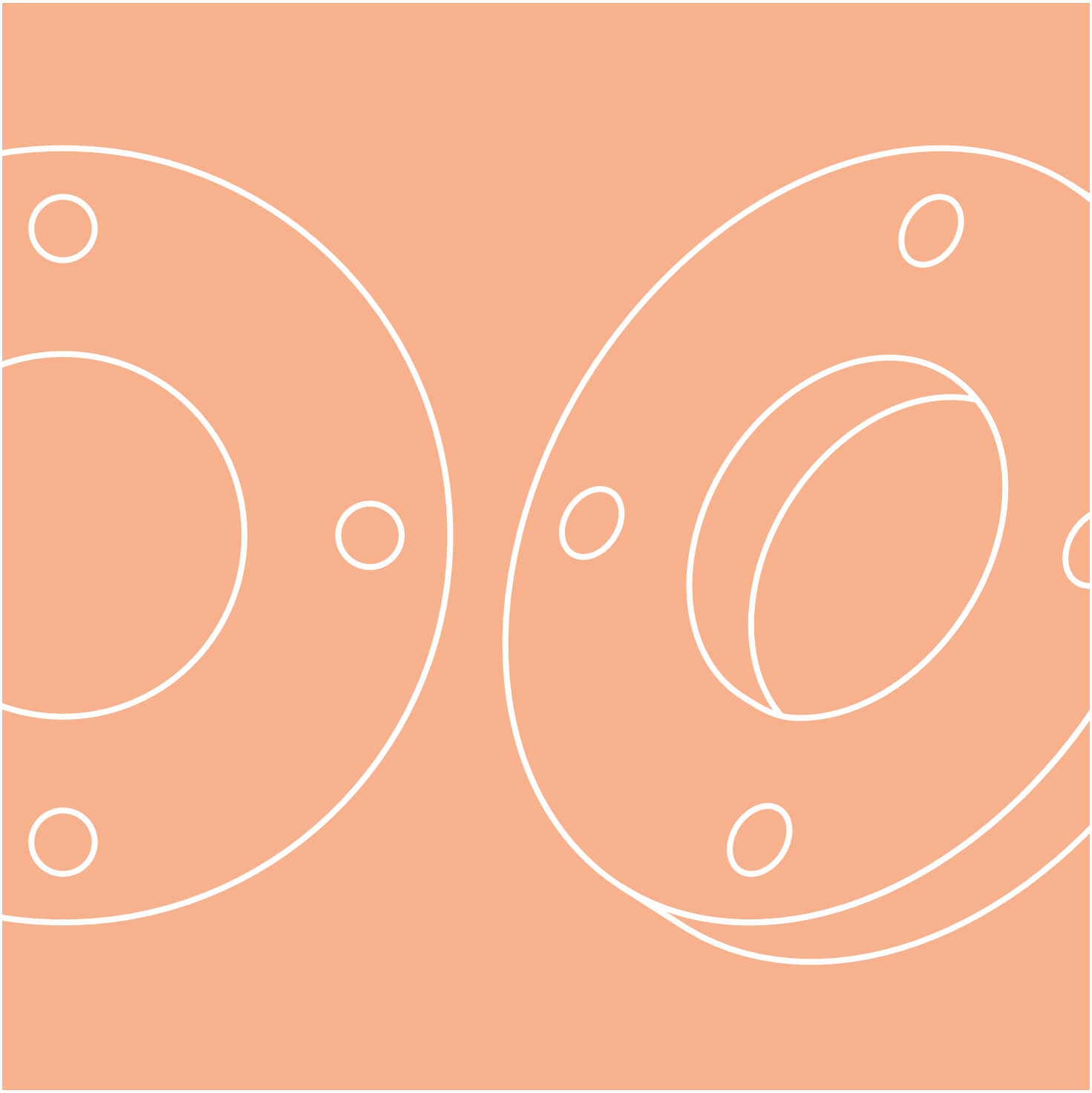

AQUAOTER

EN 1092-1/01/A PN06

11FLANG

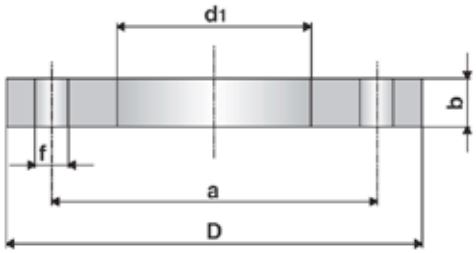

Flat flange (UNI 2276)

- Material: S235JR EN 10025

CHARACTERISTICS: dimensional rule UNI EN 1092-1. Lining keeps semicircular profile (range 0.8 to 1 mm pitch and 0.8 to 1 mm) concentric or phonographic (RF). Optional step UNI EN 1092-1
USE: used for the non-permanent connection between two pipes using screws or bolts.

CODICE	DN	∅ [inch]	∅ [mm]	a [mm]	b [mm]	D [mm]	d_1 [mm]	fxn°	kg	€ Each
D7601	15	1/2"	21,3	55	12	80	22	11x4	0,236	**12,45**
D7602	20	3/4"	26,9	65	14	90	27,5	11x4	0,51	**18,15**
D7603	25	1"	33,7	75	14	100	34,5	11x4	0,595	**21,42**
D7604	32	1.1/4"	42,4	90	16	120	43,5	14x4	1,16	**32,44**
D7605	40	1.1/2"	48,3	100	16	130	49,5	14x4	1,35	**37,61**
D7606	50	2"	60,3	110	16	140	61,5	14x4	1,48	**44,10**
D7607	65	2.1/2"	76,1	130	16	160	77,5	14x4	1,86	**59,85**
D7608	80	3"	88,9	150	18	190	90,5	18x4	2,95	**72,64**
D7609	100*	4"	114,3	170	18	210	116	18x4	3,26	**85,61**
D7610	125	5"	139,7	200	20	240	141,5	18x8	4,31	**114,13**
D7611	150	6"	168,3	225	20	265	170,5	18x8	4,76	**132,29**
D7612	200	8"	219,1	280	22	320	221,5	18x8	6,88	**194,56**

For not indicated sizes, please contact our offices for minimum order and prices - SR: price on demand

Oteraccordi S.p.A. reserves the right to change the information contained in this catalogue without notice.

EN 1092-1/01/A PN10

11FLANG

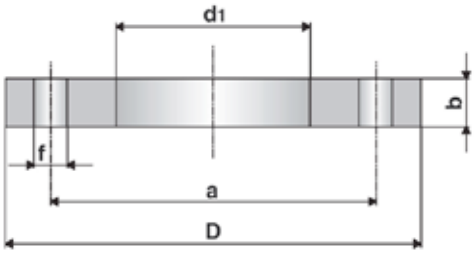

Flat flange (UNI 2277)

• Material: S235JR EN 10025

CHARACTERISTICS: dimensional rule UNI EN 1092-1. Lining keeps semicircular profile (range 0.8 to 1 mm pitch and 0.8 to 1 mm) concentric or phonographic (RF). Optional step UNI EN 1092-1. For DN 10÷75 use flanges UNI EN 1092-01.
USE: used for the non-permanent connection between two pipes using screws or bolts.

CODICE	DN	∅ [inch]	∅ [mm]	a [mm]	b [mm]	D [mm]	d_1 [mm]	fxn°	kg	€ Each
D7801	15	1/2"	21,3	65	14	95	22	14x4	0,67	**21,56**
D7802	20	3/4"	26,9	75	16	105	27,5	14x4	0,936	**21,07**
D7803	25	1"	33,7	85	16	115	34,5	14x4	1,11	**25,03**
D7804	32	1.1/4"	42,4	100	18	140	43,5	18x4	1,82	**36,88**
D7805	40	1.1/2"	48,3	110	18	150	49,5	18x4	2,08	**39,52**
D7806	50	2"	60,3	125	20	165	61,5	18x4	2,73	**50,49**
D7807	65	2.1/2"	76,1	145	20	185	77,5	18x8	3,16	**75,23**
D7808	80	3"	88,9	160	20	200	90,5	18x8	3,6	**74,45**
D7809	100	4"	114,3	180	22	220	116	18x8	4,39	**86,91**
D7810	125	5"	139,7	210	22	250	141,5	18x8	5,41	**108,01**
D7811	150	6"	168,3	240	24	285	170,5	22x8	7,14	**142,23**
D7712	200	8"	219,1	295	24	340	221,5	22x8	9,27	**209,94**

For not indicated sizes, please contact our offices for minimum order and prices - SR: price on demand

Oteraccordi S.p.A. reserves the right to change the information contained in this catalogue without notice.

EN 1092-1/01/A PN16

11FLANG

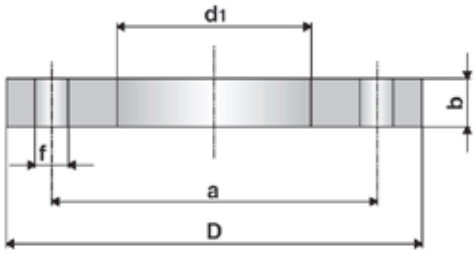

Flat flange (UNI 2278)

- Material: S235JR EN 10025

CHARACTERISTICS: dimensional rule UNI EN 1092-1. Lining keeps semicircular profile (range 0.8 to 1 mm pitch and 0.8 to 1 mm) concentric or phonographic (RF). Optional step UNI EN 1092-1:2013.
USE: used for the non-permanent connection between two pipes using screws or bolts.

CODICE	DN	∅ [inch]	∅ [mm]	a [mm]	b [mm]	D [mm]	d_1 [mm]	fxn°	kg	€ Each
D7801	15	1/2"	21,3	65	14	95	22	14x4	0,67	**21,56**
D7802	20	3/4"	26,9	75	16	105	27,5	14x4	0,936	**21,07**
D7803	25	1"	33,7	85	16	115	34,5	14x4	1,11	**25,03**
D7804	32	1.1/4"	42,4	100	18	140	43,5	18x4	1,82	**36,88**
D7805	40	1.1/2"	48,3	110	18	150	49,5	18x4	2,08	**39,52**
D7806	50	2"	60,3	125	20	165	61,5	18x4	2,73	**50,49**
D7807	65	2.1/2"	76,1	145	20	185	77,5	18x8	3,16	**75,23**
D7808	80	3"	88,9	160	20	200	90,5	18x8	3,6	**74,45**
D7809	100	4"	114,3	180	22	220	116	18x8	4,39	**86,91**
D7810	125	5"	139,7	210	22	250	141,5	18x8	5,41	**108,01**
D7811	150	6"	168,3	240	24	285	170,5	22x8	7,14	**142,23**
D7812	200	8"	219,1	295	26	340	221,5	22x12	9,73	**299,32**

For not indicated sizes, please contact our offices for minimum order and prices - SR: price on demand

Oteraccordi S.p.A. reserves the right to change the information contained in this catalogue without notice.

EN 1092-1/05/A PN06

11FLANG

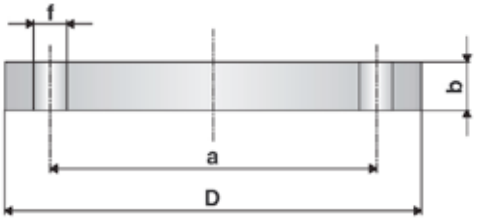

Blind flange (UNI 6091)

• Material: S235JR EN 10025

CHARACTERISTICS: dimensional rule UNI EN 1092-1. Lining keeps semicircular profile (range 0.8 to 1 mm pitch and 0.8 to 1 mm) concentric or phonographic (RF).
USE: used to create a closing at the end of a pipe.

CODICE	DN	∅ [inch]	a [mm]	b [mm]	D [mm]	fxn°	kg	€ Each
S9101	15	1/2"	55	12	80	11x4	0,438	**21,08**
S9102	20	3/4"	65	14	90	11x4	0,657	**22,25**
S9103	25	1"	75	14	100	11x4	0,821	**26,40**
S9104	32	1.1/4"	90	14	120	14x4	1,18	**35,04**
S9105	40	1.1/2"	100	14	130	14x4	1,39	**40,41**
S9106	50	2"	110	14	140	14x4	1,62	**53,87**
S9107	65	2.1/2"	130	14	160	14x4	2,14	**67,34**
S9108	80	3"	150	16	190	18x4	3,43	**86,20**
S9109	100	4"	170	16	210	18x4	4,22	**107,75**
S9110	125	5"	200	18	240	18x8	6,1	**161,64**
S9111	150	6"	225	18	265	18x8	7,51	**210,12**
S9112	200	8"	280	20	320	18x8	12,3	**390,59**

For not indicated sizes, please contact our offices for minimum order and prices - SR: price on demand

Oteraccordi S.p.A. reserves the right to change the information contained in this catalogue without notice.

EN 1092-1/05/A PN10

11FLANG

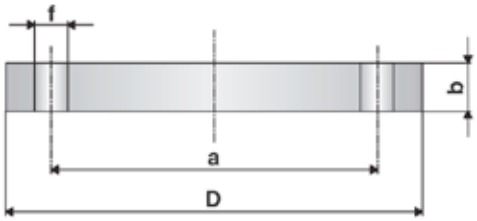

Blind flange (UNI 6092)

- Material: S235JR EN 10025

CHARACTERISTICS: dimensional rule UNI EN 1092-1. Lining keeps semicircular profile (range 0.8 to 1 mm pitch and 0.8 to 1 mm) concentric or phonographic (RF). For DN 10 to 175 use flanges UNI EN 1092 -1: 2013.
USE: used to create a closing at the end of a pipe.

CODICE	DN	∅ [inch]	a [mm]	b [mm]	D [mm]	fxn°	kg	€ Each
S9301	15	1/2"	65	16	95	14x4	0,813	**29,58**
S9302	20	3/4"	75	18	105	14x4	1,14	**29,78**
S9303	25	1"	85	18	115	14x4	1,38	**27,71**
S9304	32	1.1/4"	100	18	140	18x4	2,03	**44,17**
S9305	40	1.1/2"	110	18	150	18x4	2,35	**46,21**
S9306	50	2"	125	18	165	18x4	2,88	**55,42**
S9307	65	2.1/2"	145	18	185	18x8	3,51	**70,55**
S9308	80	3"	160	20	200	18x8	4,61	**88,19**
S9309	100	4"	180	20	220	18x8	5,65	**134,68**
S9310	125	5"	210	22	250	18x8	8,13	**138,57**
S9311	150	6"	240	22	285	22x8	10,5	**195,36**
S9212	200	8"	295	24	340	22x8	16,5	**430,31**

For not indicated sizes, please contact our offices for minimum order and prices - SR: price on demand

Oteraccordi S.p.A. reserves the right to change the information contained in this catalogue without notice.

EN 1092-1/05/A PN16

11FLANG

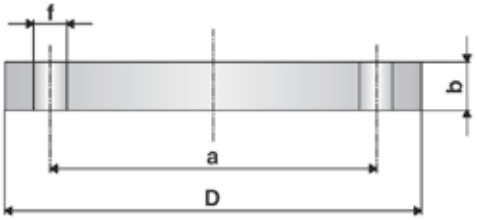

Blind flange (UNI 6093)

• Material: S235JR EN 10025

CHARACTERISTICS: dimensional rule UNI EN 1092-1. Lining keeps semicircular profile (range 0.8 to 1 mm pitch and 0.8 to 1 mm) concentric or phonographic (RF).
USE: used to create a closing at the end of a pipe.

CODICE	DN	∅ [inch]	a [mm]	b [mm]	D [mm]	fxn°	kg	€ Each
S9301	15	1/2"	65	16	95	14x4	0,813	**29,58**
S9302	20	3/4"	75	18	105	14x4	1,14	**29,78**
S9303	25	1"	85	18	115	14x4	1,38	**27,71**
S9304	32	1.1/4"	100	18	140	18x4	2,03	**44,17**
S9305	40	1.1/2"	110	18	150	18x4	2,35	**46,21**
S9306	50	2"	125	18	165	18x4	2,88	**55,42**
S9307	65	2.1/2"	145	18	185	18x8	3,51	**70,55**
S9308	80	3"	160	20	200	18x8	4,61	**88,19**
S9309	100	4"	180	20	220	18x8	5,65	**134,68**
S9310	125	5"	210	22	250	18x8	8,13	**138,57**
S9311	150	6"	240	22	285	22x8	10,5	**195,36**
S9312	200	8"	295	24	340	22x12	16,2	**443,76**

For not indicated sizes, please contact our offices for minimum order and prices - SR: price on demand

Oteraccordi S.p.A. reserves the right to change the information contained in this catalogue without notice.

EN 1092-1/11/B1 PN06

11FLANG

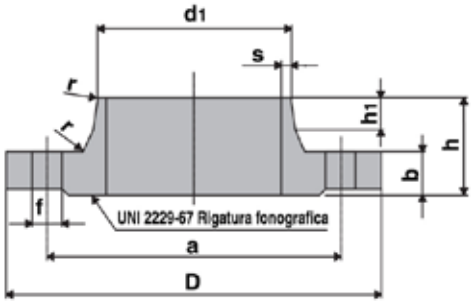

Flange with neck (UNI 2280)

• Material: S235JR EN 10025

CHARACTERISTICS: dimensional rule UNI EN 1092-1. Lining keeps semicircular profile (range 0.8 to 1 mm pitch and 0.8 to 1 mm) concentric or phonographic (RF). Step UNI EN 1092-1.
USE: used for the non-permanent coupling of two pipes using screws or bolts.

CODICE	DN	∅ [inch]	∅ [mm]	h [mm]	a [mm]	b [mm]	D [mm]	d_1 [mm]	S [mm]	fxn°	kg	€ Each
D8003	25	1"	33,7	35	75	14	100	34,5	2,6	11x4	0,76	**19,80**
D8004	32	1.1/4"	42,4	35	90	14	120	43,5	2,6	14x4	1,11	**28,17**
D8005	40	1.1/2"	48,3	38	100	14	130	49,5	2,6	14x4	1,26	**32,49**
D8006	50	2"	60,3	38	110	14	140	61,5	2,9	14x4	1,43	**36,97**
D8007	65	2.1/2"	76,1	38	130	14	160	77,5	2,9	14x4	1,77	**47,36**
D8008	80	3"	88,9	42	150	16	190	90,5	3,2	18x4	2,88	**67,89**
D8009	100	4"	114,3	45	170	16	210	116	3,6	18x4	3,41	**86,46**
D8010	125	5"	139,7	48	200	18	240	141,5	4	18x8	4,65	**102,67**
D8011	150	6"	168,3	48	225	18	265	170,5	4,5	18x8	5,5	**157,14**
D8012	200	8"	219,1	55	280	20	320	221,5	6,3	18x8	8,6	**248,69**

For not indicated sizes, please contact our offices for minimum order and prices - SR: price on demand

Oteraccordi S.p.A. reserves the right to change the information contained in this catalogue without notice.

EN 1092-1/11/B1 PN10

11FLANG

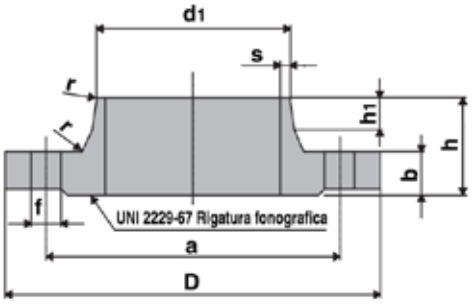

Flange with neck (UNI 2281)

• Material: S235JR EN 10025

CHARACTERISTICS:dimensional rule UNI EN 1092-1. Lining keeps semicircular profile (range 0.8 to 1 mm pitch and 0.8 to 1 mm) concentric or phonographic (RF). Step UNI EN 1092-1. For these DN 10 ÷ 175 use flanges UNI EN 1092-1.
USE: used for the non-permanent coupling of two pipes using screws or bolts.

CODICE	DN	∅ [inch]	∅ [mm]	h [mm]	a [mm]	b [mm]	D [mm]	d_1 [mm]	S [mm]	fxn°	kg	€ Each
D8401	15	1/2"	21,3	38	65	16	95	22	2	14x4	0,768	**25,94**
D8402	20	3/4"	26,9	40	75	18	105	27,5	2,3	14x4	1,09	**35,37**
D8403	25	1"	33,7	40	85	18	115	34,5	2,6	14x4	1,3	**40,49**
D8404	32	1.1/4"	42,4	42	100	18	140	43,5	2,6	18x4	1,91	**47,40**
D8405	40	1.1/2"	48,3	45	110	18	150	49,5	2,6	18x4	2,15	**50,28**
D8206	50	2"	60,3	45	125	18	165	61,5	2,9	18x4	2,53	**58,77**
D8207	65	2.1/2"	76,1	45	145	18	185	77,5	2,9	18x8	3,03	**69,28**
D8208	80	3"	88,9	50	160	20	200	90,5	3,2	18x8	3,92	**84,61**
D8209	100	4"	114,3	52	180	20	220	116	3,6	18x8	4,62	**96,58**
D8210	125	5"	139,7	55	210	22	250	141,5	4	18x8	6,3	**129,11**
D8211	150	6"	168,3	55	240	22	285	170,5	4,5	22x8	7,81	**161,67**
D8112	200	8"	219,1	62	295	24	340	221	5	22x8	11,4	**283,42**

For not indicated sizes, please contact our offices for minimum order and prices - SR: price on demand

Oteraccordi S.p.A. reserves the right to change the information contained in this catalogue without notice.

EN 1092-1/11/B1 PN16

11FLANG

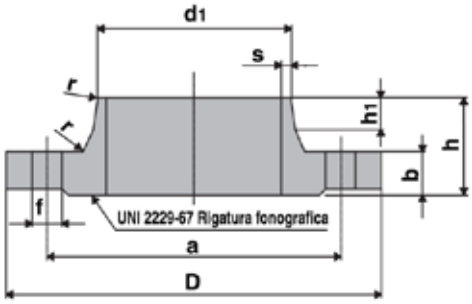

Flange with neck (UNI 2282)

- Material: S235JR EN 10025

CHARACTERISTICS: dimensional rule UNI EN 1092-1. Lining keeps semicircular profile (range 0.8 to 1 mm pitch and 0.8 to 1 mm) concentric or phonographic (RF). Step UNI EN 1092-1.
USE: used for the non-permanent coupling of two pipes using screws or bolts.

CODICE	DN	∅ [inch]	∅ [mm]	h [mm]	a [mm]	b [mm]	D [mm]	d_1 [mm]	S [mm]	fxn°	kg	€ Each
D8401	15	1/2"	21,3	38	65	16	95	22	2	14x4	0,768	**25,94**
D8402	20	3/4"	26,9	40	75	18	105	27,5	2,3	14x4	1,09	**35,37**
D8403	25	1"	33,7	40	85	18	115	34,5	2,6	14x4	1,3	**40,49**
D8404	32	1.1/4"	42,4	42	100	18	140	43,5	2,6	18x4	1,91	**47,40**
D8405	40	1.1/2"	48,3	45	110	18	150	49,5	2,6	18x4	2,15	**50,28**
D8206	50	2"	60,3	45	125	18	165	61,5	2,9	18x4	2,53	**58,77**
D8207	65	2.1/2"	76,1	45	145	18	185	77,5	2,9	18x8	3,03	**69,28**
D8208	80	3"	88,9	50	160	20	200	90,5	3,2	18x8	3,92	**84,61**
D8209	100	4"	114,3	52	180	20	220	116	3,6	18x8	4,62	**96,58**
D8210	125	5"	139,7	55	210	22	250	141,5	4	18x8	6,3	**129,11**
D8211	150	6"	168,3	55	240	22	285	170,5	4,5	22x8	7,81	**161,67**
D8212	200	8"	219,1	62	295	24	340	221,5	6,3	22x12	11,5	**256,99**

For not indicated sizes, please contact our offices for minimum order and prices - SR: price on demand

Oteraccordi S.p.A. reserves the right to change the information contained in this catalogue without notice.

EN 1092-1/11/B1 PN40

11FLANG

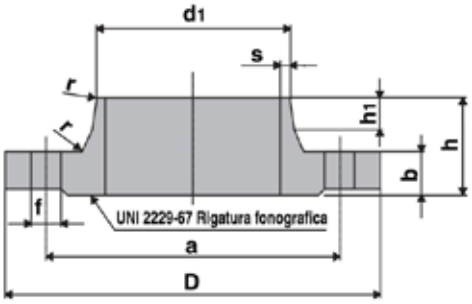

Flange with neck (UNI 2284)

• Material: S235JR EN 10025

CHARACTERISTICS: dimensional rule UNI EN 1092-1. Lining keeps semicircular profile (range 0.8 to 1 mm pitch and 0.8 to 1 mm) concentric or phonographic (RF). Step UNI EN 1092-1.
USE: used for the non-permanent coupling of two pipes using screws or bolts.

CODICE	DN	∅ [inch]	∅ [mm]	h [mm]	a [mm]	b [mm]	D [mm]	d_1 [mm]	S [mm]	fxn°	kg	€ Each
D8401	15	1/2"	21,3	38	65	16	95	22	2	14x4	0,768	**25,94**
D8402	20	3/4"	26,9	40	75	18	105	27,5	2,3	14x4	1,09	**35,37**
D8403	25	1"	33,7	40	85	18	115	34,5	2,6	14x4	1,3	**40,49**
D8404	32	1.1/4"	42,4	42	100	18	140	43,5	2,6	18x4	1,91	**47,40**
D8405	40	1.1/2"	48,3	45	110	18	150	49,5	2,6	18x4	2,15	**50,28**
D8406	50	2"	60,3	48	125	20	165	61,5	2,9	18x4	2,85	**66,09**
D8407	65	2.1/2"	76,1	52	145	22	185	77,5	2,9	18x8	3,68	**86,20**
D8408	80	3"	88,9	58	160	24	200	90,5	3,2	18x8	4,78	**109,19**
D8409	100	4"	114,3	65	190	24	235	116	3,6	22x8	6,46	**146,54**
D8410	125	5"	139,7	68	220	26	270	141,5	4	26x8	8,86	**189,66**
D8411	150	6"	168,3	75	250	28	300	170,5	4,5	26x8	11,7	**252,87**

For not indicated sizes, please contact our offices for minimum order and prices - SR: price on demand

Oteraccordi S.p.A. reserves the right to change the information contained in this catalogue without notice.

EN 1092-1/13/A PN06

11FLANG

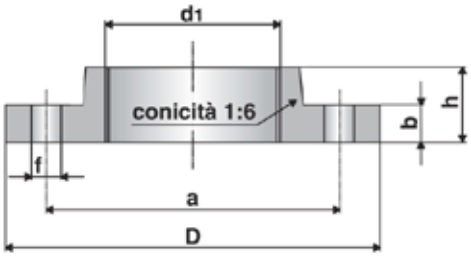

Threaded flange (UNI 2253)

- Material: S235JR EN 10025

CHARACTERISTICS: dimensional rule UNI EN 1092-1. GAS thread UNI 338. Continue line with semicircular profile (range 0.8 to 1 mm pitch and 0.8 to 1 mm) concentric or phonographic (RF).
USE: flange with internal threaded socket used for non permanent joining of 2 pipes with screws and bolts.

CODICE	DN	∅ [inch]	∅ [mm]	h [mm]	a [mm]	b [mm]	D [mm]	d_1 [mm]	fxn°	kg	€ Each
D5301	15	1/2"	21,3	20	55	12	80	Gj 1/2"	11x4	0,43	**18,15**
D5302	20	3/4"	26,9	24	65	14	90	Gj 3/4"	11x4	0,66	**28,74**
D5303	25	1"	33,7	24	75	14	100	Gj 1"	11x4	0,82	**31,92**
D5304	32	1.1/4"	42,4	26	90	14	120	Gj 1"1/4	14x4	1,17	**38,17**
D5305	40	1.1/2"	48,3	26	100	14	130	Gj 1"1/2	14x4	1,4	**45,80**
D5306	50	2"	60,3	28	110	14	140	Gj 2"	14x4	1,59	**48,87**
D5307	65	2.1/2"	76,1	32	130	14	160	Gj 2"1/2	14x4	2,17	**65,66**
D5308	80	3"	88,9	34	150	16	190	Gj 3"	18x4	3,2	**96,20**
D5309	100	4"	114,3	40	170	16	210	Gj 4"	18x4	3,59	**86,34**

For not indicated sizes, please contact our offices for minimum order and prices - SR: price on demand

Oteraccordi S.p.A. reserves the right to change the information contained in this catalogue without notice.

EN 1092-1/13/A PN10/16

11FLANG

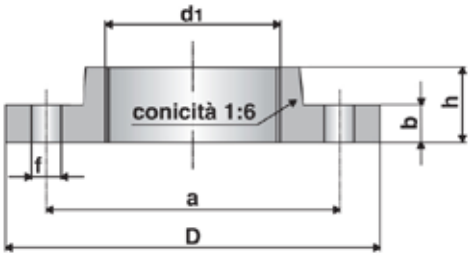

Threaded flange (UNI 2254)

• Material: S235JR EN 10025

CHARACTERISTICS: dimensional rule UNI EN 1092-1. GAS thread UNI 338. Continue line with semicircular profile (range 0.8 to 1 mm pitch and 0.8 to 1 mm) concentric or phonographic (RF).
USE: flange with internal threaded socket used for non permanent joining of 2 pipes with screws and bolts.

CODICE	DN	∅ [inch]	∅ [mm]	h [mm]	a [mm]	b [mm]	D [mm]	d_1 [mm]	fxn°	kg	€ Each
D5401	15	1/2"	21,3	22	65	16	95	Gj 1/2"	14x4	0,7	**25,78**
D5402	20	3/4"	26,9	26	75	18	105	Gj 3/4"	14x4	1,01	**33,04**
D5403	25	1"	33,7	28	85	18	115	Gj 1"	14x4	1,21	**34,87**
D5404	32	1.1/4"	42,4	30	100	18	140	Gj 1"1/4	18x4	1,76	**50,21**
D5405	40	1.1/2"	48,3	32	110	18	150	Gj 1"1/2	18x4	2,04	**55,26**
D5406	50	2"	60,3	28	125	18	165	Gj 2"	18x4	2,85	**57,73**
D5407	65	2.1/2"	76,1	32	145	18	185	Gj 2"1/2	18x8	3,53	**68,70**
D5408	80	3"	88,9	34	160	20	200	Gj 3"	18x8	4,24	**93,44**
D5409	100	4"	114,3	40	180	20	220	Gj 4"	18x8	4,9	**104,45**
D5410	125	5"	139,7	44	210	22	250	Gj 5"	18x8	6,63	**176,10**
D5411	150	6"	168,3	44	240	22	285	Gj 6"	22x8	8,49	**218,62**

For not indicated sizes, please contact our offices for minimum order and prices - SR: price on demand

Oteraccordi S.p.A. reserves the right to change the information contained in this catalogue without notice.

11FLANG

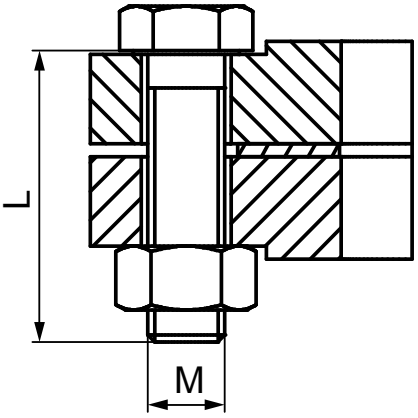

Bolts for flanges PN6 ÷ PN40

- Material: S235JR EN 10025

CHARACTERISTICS: conforms to the following standard: UNI 5739 DIN 933 class 8.8 (screw) and UNI 5588 DIN 934 Class 8 (nuts)
USE: joining element which allows the connection between two flanges.

CODICE	MxL		€ Each
SM001	M10x45	10	1,38
SM002	M12x50	10	2,19
SM003	M12x55	10	2,32
SM004	M16x60	10	3,94
SM005	M16x65	10	4,41
SM006	M16x70	10	6,25
SM007	M20x80	10	10,44
SM008	M22x80	10	11,23
SM009	M22x90	10	12,61
SM010	M22x100	10	20,82

Bulloni per flange da PN 6 a PN 40

DN	PN 6		PN 10		PN 16		PN 25		PN 40	
	N°	M x L	N°	M x L	N°	M x L	N°	M x L	N°	M x L
10	4	M10x45	4	M12x50	4	M12x50	4	M12x50	4	M12x50
15	4	M10x45	4	M12x50	4	M12x50	4	M12x50	4	M12x50
20	4	M10x45	4	M12x50	4	M12x50	4	M12x55	4	M12x55
25	4	M10x45	4	M12x50	4	M12x50	4	M12x55	4	M12x55
32	4	M12x45	4	M16x60	4	M16x60	4	M16x60	4	M16x60
40	4	M12x45	4	M16x60	4	M16x60	4	M16x60	4	M16x60
50	4	M12x45	4	M16x60	4	M16x60	4	M16x65	4	M16x65
65	4	M12x45	8	M16x60	8	M16x60	8	M16x70	8	M16x70
80	4	M16x60	8	M16x65	8	M16x65	8	M16x70	8	M16x70
100	4	M16x60	8	M16x65	8	M16x65	8	M20x80	8	M20x80
125	8	M16x65	8	M16x70	8	M16x70	8	M22x80	8	M22x80
150	8	M16x65	8	M20x80	8	M20x80	8	M22x90	8	M22x90
200	8	M16x70	8	M20x80	12	M20x80	12	M22x90	12	M27x100
250	12	M16x70	12	M20x85	12	M22x90	12	M27x100	12	M30x110
300	12	M20x80	12	M20x85	12	M22x90	16	M27x100	16	M30x120
350	12	M20x80	16	M20x85	16	M22x100	16	M30x110	16	M33x130
400	16	M20x80	16	M22x80	16	M27x105	16	M33x120	16	M36x140
450	16	M20x80	20	M22x80	20	M27x105	20	M33x120	20	M36x140
500	20	M20x80	20	M22x80	20	M30x110	20	M33x120	20	M39x150
600	20	M22x85	20	M27x95	20	M33x115	20	M36x140	20	M45x170

Oteraccordi S.p.A. reserves the right to change the information contained in this catalogue without notice.

7001

11FLANG

GASKET FOR FLANGES PN6 ÷ PN16

• Material: Joint composed of cellulose fibers, fibers and mineral, elastomeric binder based on NBR (FASIT® 202)

CHARACTERISTICS: maximum working temperature + 200 ° C. Maximum working pressure 80 Bar. Not suitable to be used for gas installations
USE: asbestos-free sealing device placed between two flanges.

CODICE	DN	Øi x Øe x S [mm]		€ Each
SM101	15	50x20x2	10	**0,97**
SM102	20	60x25x2	10	**1,52**
SM103	25	70x30x2	10	**2,07**
SM104	32	82x38x2	10	**2,40**
SM105	40	92x45x2	10	**2,84**
SM106	50	107x59x2	10	**3,57**
SM107	65	127x76x2	10	**4,65**
SM108	80	142x89x2	10	**6,98**
SM109	100	162x108x2	5	**9,23**
SM110	125	192x140x2	5	**11,90**
SM111	150	218x168x2	5	**13,78**
SM112	200	273x218x2	5	**20,88**

Oteraccordi S.p.A. reserves the right to change the information contained in this catalogue without notice.

note

note

BRASS
FITTINGS

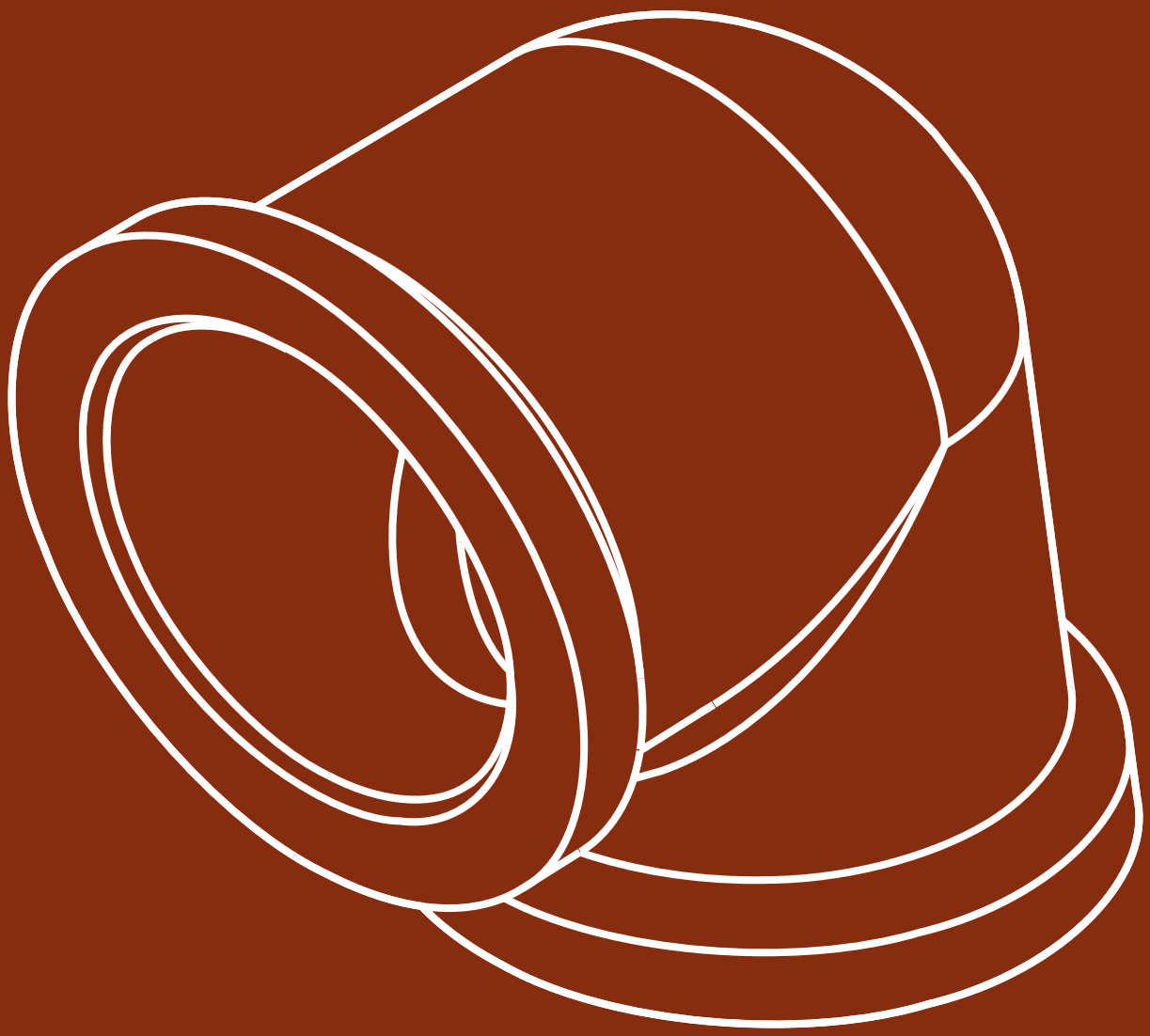

AQUAOTER

90-O

13RACOT

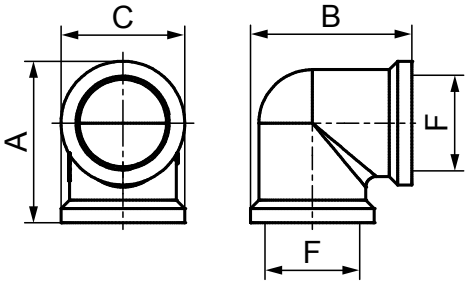

90° Elbow with F-F thread

• Material: brass CW614N

CHARACTERISTICS:conforming to the transport of drinking water according to DM 174 04/06/04.
USE: suitable for connecting two pipes.

CODICE	F	A [mm]	B [mm]	C [mm]		€ Each
G09003	3/8"	32,5	32,5	23	10	**8,09**
G09004	1/2"	42	42	30	25	**8,51**
G09005	3/4"	45	45	35	25	**14,91**
G09006	1"	52	52	40	10	**19,33**
G09007	1.1/4"	67	67	49	5	**40,30**
G09008	1.1/2"	74	74	58,5	5	**63,34**
G09009	2"	89,5	89,5	70	2	**94,36**

90-OC

14RACOC

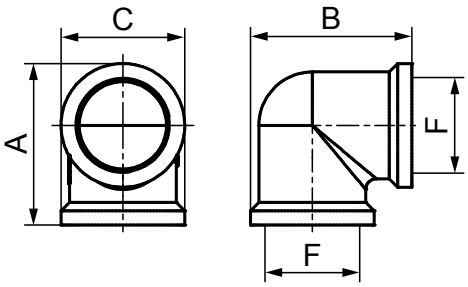

90° chromium plated elbow with F-F thread

• Material: brass CW614N

CHARACTERISTICS:conforming to the transport of drinking water according to DM 174 04/06/04.
USE: suitable for connecting two pipes.

CODICE	F	A [mm]	B [mm]	C [mm]		€ Each
L09003	3/8"	32,5	32,5	23	10	**9,49**
L09004	1/2"	42	42	30	25	**12,11**
L09005	3/4"	45	45	35	25	**16,31**
L09006	1"	52	52	40	10	**25,43**

Oteraccordi S.p.A. reserves the right to change the information contained in this catalogue without notice.

92-O

13RACOT

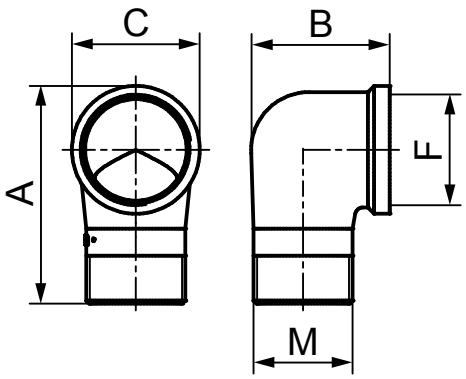

90° Elbow with M-F thread

• Material: brass CW614N

CHARACTERISTICS:conforming to the transport of drinking water according to DM 174 04/06/04.
USE: suitable for connecting two pipes.

CODICE	MxF	A [mm]	B [mm]	C [mm]		€ Each
G09203	3/8"x3/8"	39	36	23	10	**13,15**
G09204	1/2"x1/2"	47	36	30	25	**8,55**
G09205	3/4"x3/4"	57,5	39	35	25	**12,41**
G09206	1"x1"	72	55	42	10	**24,39**
G09207	1.1/4"x1.1/4"	80	59	51	5	**40,30**
G09208	1.1/2"x1.1/2"	94	67	57	5	**69,46**
G09209	2"x2"	104	84,5	70	2	**111,57**

92-OC

14RACOC

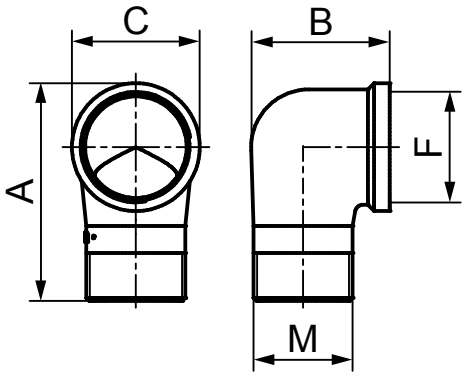

90° chromium plated elbow with M-F thread

• Material: brass CW614N

CHARACTERISTICS:conforming to the transport of drinking water according to DM 174 04/06/04.
USE: suitable for connecting two pipes.

CODICE	MxF	A [mm]	B [mm]	C [mm]		€ Each
L09203	3/8"x3/8"	39	36	23	10	**11,20**
L09204	1/2"x1/2"	47	36	30	25	**10,88**
L09205	3/4"x3/4"	57,5	39	35	25	**18,55**
L09206	1"x1"	72	72	42	10	**23,65**

Oteraccordi S.p.A. reserves the right to change the information contained in this catalogue without notice.

130-O

13RACOT

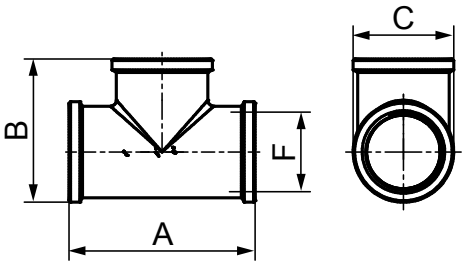

Tee with F-F-F thread

- Material: brass CW614N

CHARACTERISTICS:conforming to the transport of drinking water according to DM 174 04/06/04.
USE: suitable for connecting two pipes.

CODICE	F	A [mm]	B [mm]	C [mm]		€ Each
G13003	3/8"	36	30	22	10	**14,91**
G13004	1/2"	46	38	30	15	**10,32**
G13005	3/4"	52,5	44	35	15	**13,96**
G13006	1"	70	56	42	10	**24,76**
G13007	1.1/4"	83,5	67	51	5	**51,10**
G13008	1.1/2"	95	77	58	5	**66,69**
G13009	2"	113,5	93	73,5	2	**103,28**

130-OC

14RACOC

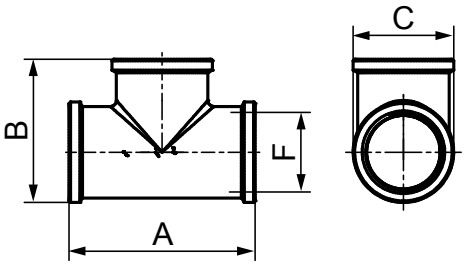

Chromium plated tee with F-F-F thread

- Material: brass CW614N

CHARACTERISTICS:conforming to the transport of drinking water according to DM 174 04/06/04.
USE: suitable for connecting two pipes.

CODICE	F	A [mm]	B [mm]	C [mm]		€ Each
L13003	3/8"	36	30	22	10	**13,19**
L13004	1/2"	46	38	30	15	**12,21**
L13005	3/4"	52,5	44	35	15	**15,46**
L13006	1"	70	56	42	10	**26,91**

Oteraccordi S.p.A. reserves the right to change the information contained in this catalogue without notice.

180-O

13RACOT

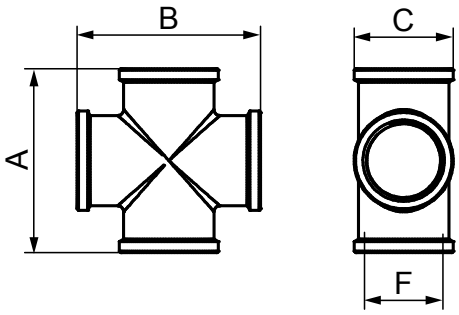

Cross with F-F-F-F thread

• Material: brass CW614N

CHARACTERISTICS:conforming to the transport of drinking water according to DM 174 04/06/04.
USE: suitable for connecting two pipes.

CODICE	F	A [mm]	B [mm]	C [mm]		€ Each
G18004	1/2"	47	47	28	10	**17,58**
G18005	3/4"	57	57	33	10	**26,41**
G18006	1"	70	70	40	10	**40,11**
G18007	1.1/4"	80	80	49	5	**83,30**
G18008	1.1/2"	93	93	57	5	**99,96**
G18009	2"	113	113	70	5	**158,23**

223-O

13RACOT

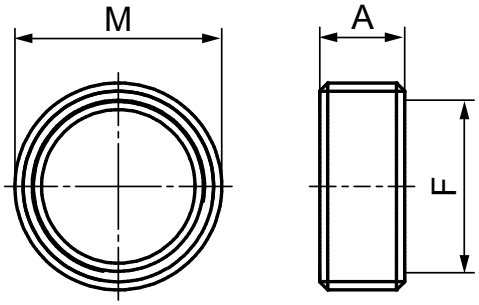

Ring nut with M-F thread

• Material: brass CW614N

CHARACTERISTICS:conforming to the transport of drinking water according to DM 174 04/06/04.
USE: suitable for connecting two pipes.

CODICE	MxF	A [mm]		€ Each
G22306	1/2"x3/8"	10	10	**3,22**
G22310	3/4x1/2"	11	10	**3,63**
G22314	1"x3/4"	12	5	**5,91**

Oteraccordi S.p.A. reserves the right to change the information contained in this catalogue without notice.

223-OC

14RACOC

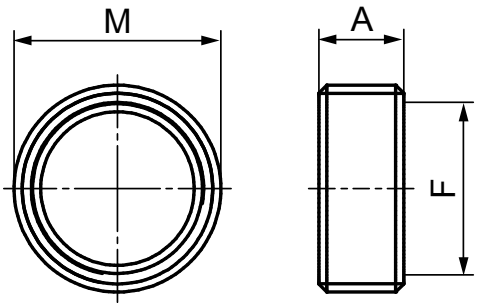

CHROMIUM PLATE RING NUT WITH M-F THREAD

- Material: brass CW614N

CHARACTERISTICS:conforming to the transport of drinking water according to DM 174 04/06/04.
USE: suitable for connecting two pipes.

CODICE	MxF	A [mm]		€ Each
L22306	1/2"x3/8"	10	10	4,29
L22310	3/4"x1/2"	11	10	4,71
L22314	1"x3/4"	12	5	6,99

240-O

13RACOT

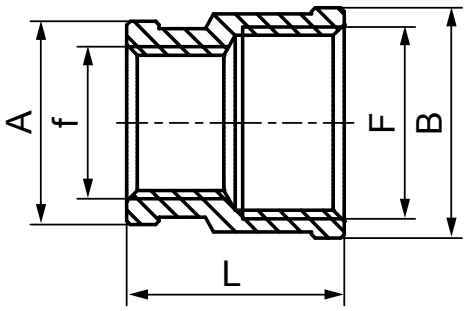

REDUCING SOCKET WITH F-F THREAD

- Material: brass CW614N

CHARACTERISTICS:conforming to the transport of drinking water according to DM 174 04/06/04.
USE: suitable for connecting two pipes.

CODICE	Fxf	A [mm]	B [mm]	L [mm]		€ Each
G24006	1/2"x3/8"	24,5	29	27,5	10	7,00
G24010	3/4"x1/2"	30	34	30	10	9,39
G24013	1"x1/2"	27	42	31	5	12,83
G24014	1"x3/4"	36	42	37	5	17,85
G24018	1.1/4"x3/4"	32	50	37	5	23,77
G24019	1.1/4"x1"	32	50	38,5	5	23,93
G24025	1.1/2"x1.1/4"	42,5	58	40,5	5	37,81
G24031	2" x1.1/2"	54	68,5	50	5	61,08

Oteraccordi S.p.A. reserves the right to change the information contained in this catalogue without notice.

240-OC

14RACOC

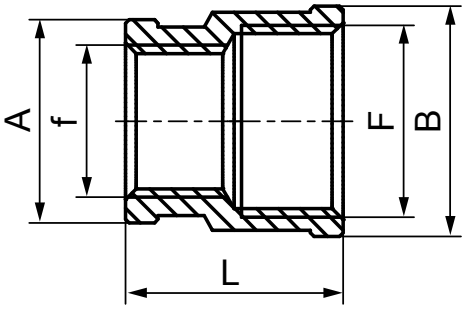

Chromium plated reducing socket with F-F thread

- Material: brass CW614N

CHARACTERISTICS:conforming to the transport of drinking water according to DM 174 04/06/04.
USE: suitable for connecting two pipes.

CODICE	Fxf	A [mm]	B [mm]	L [mm]		€ Each
L24006	1/2"x3/8"	24,5	29	27,5	10	**8,11**
L24010	3/4"x1/2"	30	34	30	10	**10,51**
L24013	1"x1/2"	27	42	31	5	**13,92**
L24014	1"x3/4"	36	42	37	5	**18,95**

Oteraccordi S.p.A. reserves the right to change the information contained in this catalogue without notice.

241-O

13RACOT

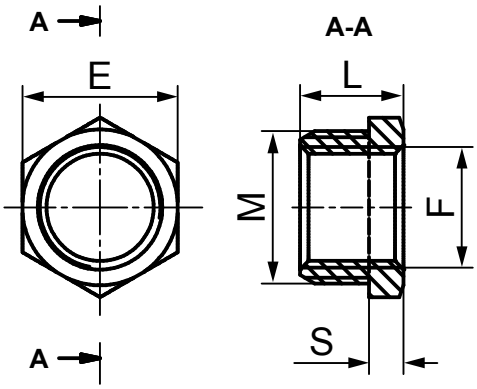

EXAGONAL REDUCER WITH M-F THREAD

- Material: brass CW614N

CHARACTERISTICS:conforming to the transport of drinking water according to DM 174 04/06/04.
USE: suitable for connecting two pipes.

CODICE	MxF	E [mm]	L [mm]	S [mm]		€ Each
G24106	1/2"x3/8"	21	16	5	10	4,74
G24109	3/4"x3/8"	27	18	6	10	8,41
G24110	3/4"x1/2"	27	18	6	10	4,95
G24112	1"x3/8"	34	20	7	5	9,93
G24113	1"x1/2"	34	20	7	5	10,93
G24114	1"x3/4"	34	20	7	5	7,85
G24117	1.1/4"x1/2"	25	42	8	5	20,07
G24118	1.1/4"x3/4"	25	42	8	5	18,71
G24119	1.1/4"x1"	25	42	8	5	15,62
G24122	1.1/2"x1/2"	27	48	9	5	35,05
G24123	1.1/2"x3/4"	27	48	9	5	28,41
G24124	1.1/2"x1"	27	48	9	5	25,06
G24125	1.1/2"x1.1/4"	27	48	9	5	18,38
G24128	2"x3/4"	30	60	10	5	55,37
G24129	2"x1"	30	60	10	5	55,37
G24130	2"x1.1/4"	30	60	10	5	44,49
G24131	2"x1.1/2"	30	60	10	5	37,81

Oteraccordi S.p.A. reserves the right to change the information contained in this catalogue without notice.

241-OC

14RACOC

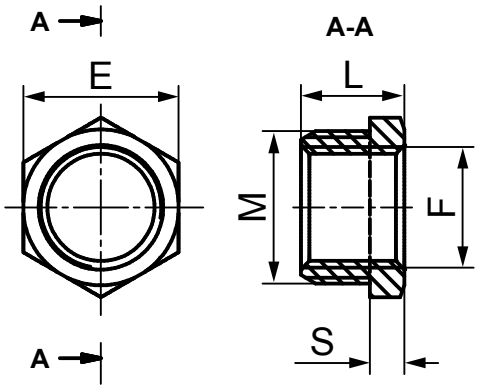

Chromium plated exagonal reducer with M-F thread

- Material: brass CW614N

CHARACTERISTICS:conforming to the transport of drinking water according to DM 174 04/06/04.
USE: suitable for connecting two pipes.

CODICE	MxF	E [mm]	L [mm]	S [mm]		€ Each
L24106	1/2"x3/8"	21	16	5	10	**5,13**
L24109	3/4"x3/8"	27	18	6	10	**9,50**
L24110	3/4"x1/2"	27	18	6	10	**6,41**
L24112	1"x3/8"	34	20	7	5	**12,90**
L24113	1"x1/2"	34	20	7	5	**14,14**
L24114	1"x3/4"	34	20	7	5	**10,18**

Oteraccordi S.p.A. reserves the right to change the information contained in this catalogue without notice.

245-O

13RACOT

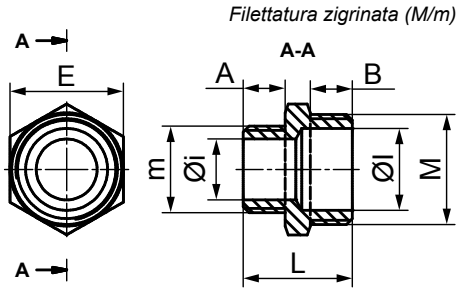

Reducer with M-M thread

- Material: brass CW614N

CHARACTERISTICS:conforming to the transport of drinking water according to DM 174 04/06/04.
USE: suitable for connecting two pipes.

CODICE	Mxm	A [mm]	B [mm]	E [mm]	L [mm]	ØI [mm]	Øi [mm]		€ Each
G24506	1/2"x3/8"	11,5	10	21	27,5	14,5	12	10	**4,85**
G24509	3/4"x3/8"	10	10	27	26	19,5	12	10	**5,30**
G24510	3/4"x1/2"	10	10	27	26	19,5	14,5	10	**7,33**
G24513	1"x1/2"	14	13	34	34	25,5	14,5	5	**12,85**
G24514	1"x3/4"	14	13	34	34	25,5	19,5	5	**10,93**
G24518	1.1/4"x3/4"	14	14	42	34	32	19,5	5	**29,81**
G24519	1.1/4"x1"	14	14	42	34	32	25	5	**31,17**
G24523	1.1/2"x3/4"	15	15	48	37	39	19,5	5	**36,26**
G24524	1.1/2"x1"	15	15	48	37	39	25	5	**28,64**
G24525	1.1/2"x1.1/4"	15	15	48	37	39	32	5	**29,52**
G24529	2"x1"	17	17	60	42	51	25	5	**59,59**
G24530	2"x1.1/4"	17	17	60	42	51	32	5	**46,38**
G24531	2"x1.1/2"	17	17	60	42	51	39	5	**48,91**

Oteraccordi S.p.A. reserves the right to change the information contained in this catalogue without notice.

245-OC

14RACOC

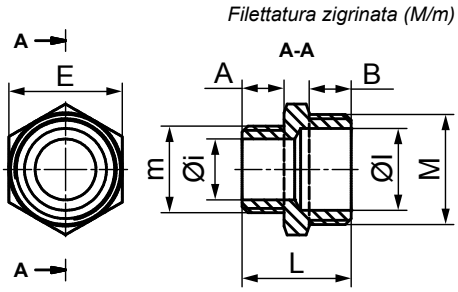

CHROMIUM PLATED REDUCER WITH M-M THREAD

• Material: brass CW614N

CHARACTERISTICS:conforming to the transport of drinking water according to DM 174 04/06/04.
USE: suitable for connecting two pipes.

CODICE	Mxm	A [mm]	B [mm]	E [mm]	L [mm]	ØI [mm]	Øi [mm]		€ Each
L24506	1/2"x3/8"	11,5	10	21	27,5	14,5	12	10	**6,64**
L24509	3/4"x3/8"	10	10	27	26	19,5	12	10	**6,91**
L24510	3/4"x1/2"	10	10	27	26	19,5	14,5	10	**9,45**
L24513	1"x1/2"	14	13	34	34	25,5	14,5	5	**13,92**
L24514	1"x3/4"	14	13	34	34	25,5	19,5	5	**14,14**

246-O

13RACOT

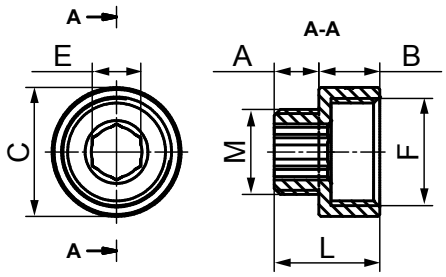

REDUCING SOCKET WITH F-M THREAD

• Material: brass CW614N

CHARACTERISTICS:conforming to the transport of drinking water according to DM 174 04/06/04.
USE: suitable for connecting two pipes.

CODICE	MxF	A [mm]	B [mm]	C [mm]	E [mm]	L [mm]		€ Each
G24606	3/8"x1/2"	10	15	26,6	10	25	10	**5,64**
G24609	3/8"x3/4"	11	15	31,8	10	26	10	**7,59**
G24610	1/2"x3/4"	11	15	31,8	12	26	10	**8,94**
G24613	1/2"x1"	12	15	37,6	12	26	5	**12,46**
G24614	3/4"x1"	12	15	37,6	17	26	5	**12,57**
G24618	3/4"x1.1/4"	10	16	45	18	27	5	**20,07**
G24619	1"x1.1/4"	10	16	45	26	27	5	**23,53**

Oteraccordi S.p.A. reserves the right to change the information contained in this catalogue without notice.

246-OC

14RACOC

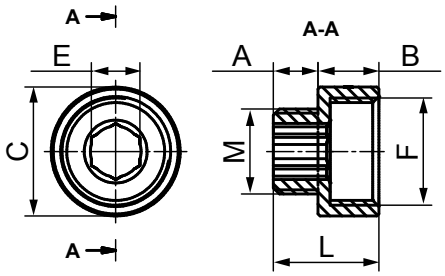

Chromium plated reducing socket with F-M thread

- Material: brass CW614N

CHARACTERISTICS:conforming to the transport of drinking water according to DM 174 04/06/04.
USE: suitable for connecting two pipes.

CODICE	MxF	A [mm]	B [mm]	C [mm]	E [mm]	L [mm]		€ Each
L24606	3/8"x1/2"	10	15	26,6	10	25	10	**7,93**
L24609	3/8"x3/4"	11	15	31,8	10	26	10	**6,91**
L24610	1/2"x3/4"	11	15	31,8	12	26	10	**11,62**
L24613	1/2"x1"	12	15	37,6	12	26	5	**13,56**
L24614	3/4"x1"	12	15	37,6	17	26	5	**16,27**

247-OC

14RACOC

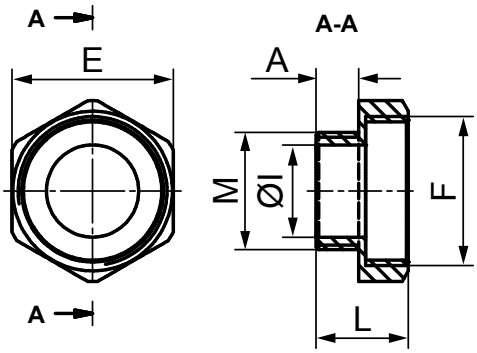

Chromium plated reducer with M-F thread

- Material: brass CW614N

CHARACTERISTICS:conforming to the transport of drinking water according to DM 174 04/06/04.
USE: suitable for connecting two pipes.

CODICE	MxF	A [mm]	E [mm]	L [mm]	ØI [mm]		€ Each
L24719	1"x1.1/4"	12	46	26	26	10	**15,33**
L24725	1.1/4"x1.1/2"	11	50	24	35	10	**22,30**

Oteraccordi S.p.A. reserves the right to change the information contained in this catalogue without notice.

268-O

13RACOT

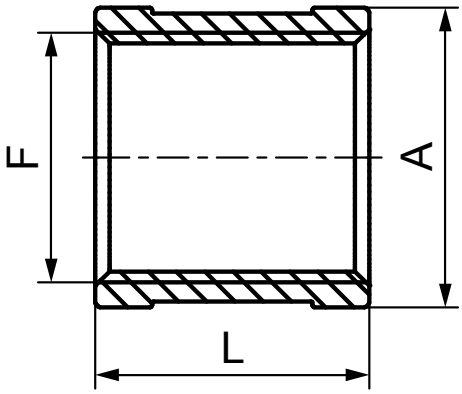

Socket with F-F thread

• Material: brass CW614N

CHARACTERISTICS:conforming to the transport of drinking water according to DM 174 04/06/04.
USE: suitable for connecting two pipes.

CODICE	F	A [mm]	L [mm]		€ Each
G26803	3/8"	25	22,7	10	**6,46**
G26804	1/2"	28,7	29	10	**6,74**
G26805	3/4"	31,7	29	10	**8,94**
G26806	1"	41,7	33	5	**14,22**
G26807	1.1/4"	50,5	36	5	**20,86**
G26808	1.1/2"	56,7	40	5	**32,55**
G26809	2"	68,7	51,5	5	**52,82**

268-OC

14RACOC

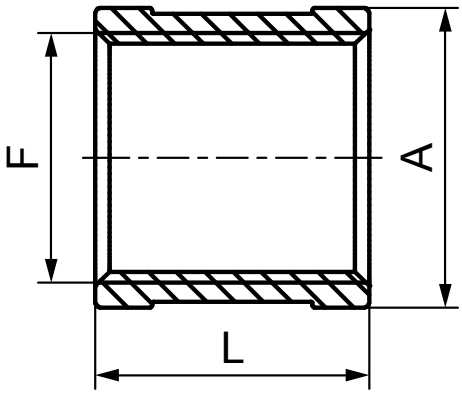

Chromium plated socket with F-F thread

• Material: brass CW614N

CHARACTERISTICS:conforming to the transport of drinking water according to DM 174 04/06/04.
USE: suitable for connecting two pipes.

CODICE	F	A [mm]	L [mm]		€ Each
L26803	3/8"	25	22,7	10	**7,97**
L26804	1/2"	28,7	29	10	**8,75**
L26805	3/4"	31,7	29	10	**11,62**
L26806	1"	41,7	33	5	**18,38**

Oteraccordi S.p.A. reserves the right to change the information contained in this catalogue without notice.

280-O

13RACOT

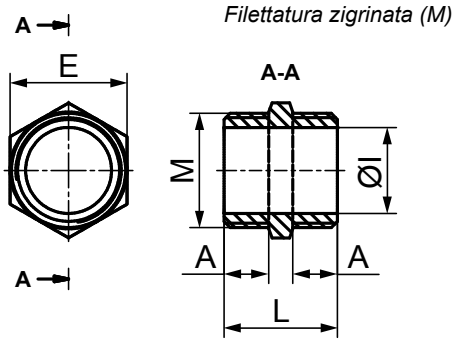

Double screw with M-M thread

- Material: brass CW614N

CHARACTERISTICS:conforming to the transport of drinking water according to DM 174 04/06/04.
USE: suitable for connecting two pipes.

CODICE	M	A [mm]	E [mm]	L [mm]	ØI [mm]		€ Each
G28003	3/8"	10	18	25	12	10	**5,06**
G28004	1/2"	11,5	21	29	14,5	10	**4,51**
G28005	3/4"	11	27	28	20	10	**6,74**
G28006	1"	13	34	33	25	5	**10,61**
G28007	1.1/4"	16	45	38	34	5	**18,69**
G28008	1.1/2"	17	50	42	39	5	**25,06**
G28009	2"	21	60	52	52	5	**38,92**

280-OC

14RACOC

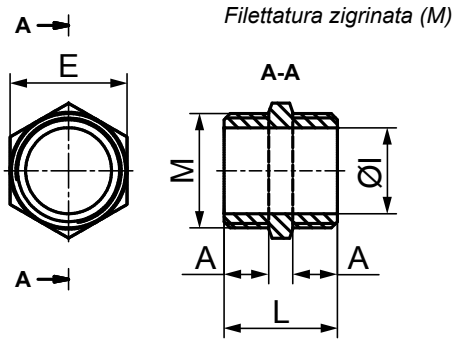

Chromium plated double screw with M-M thread

- Material: brass CW614N

CHARACTERISTICS:conforming to the transport of drinking water according to DM 174 04/06/04.
USE: suitable for connecting two pipes.

CODICE	M	A [mm]	E [mm]	L [mm]	ØI [mm]		€ Each
L28003	3/8"	10	18	25	12	10	**8,13**
L28004	1/2"	11,5	21	29	14,5	10	**5,74**
L28005	3/4"	11	27	28	20	10	**8,41**
L28006	1"	13	34	33	25	5	**13,96**

Oteraccordi S.p.A. reserves the right to change the information contained in this catalogue without notice.

292-O

13RACOT

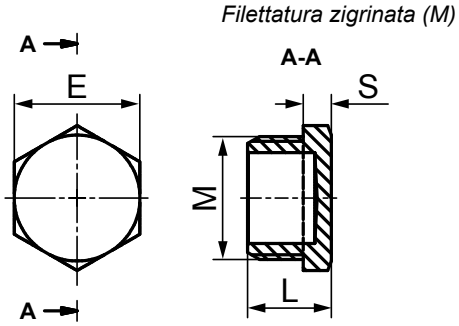

Hexagonal plug with M thread

• Material: brass CW614N

CHARACTERISTICS:conforming to the transport of drinking water according to DM 174 04/06/04.
USE: suitable for connecting two pipes.

CODICE	M	E [mm]	L [mm]	S [mm]		€ Each
G29203	3/8"	18	13,5	5	10	**3,22**
G29204	1/2"	21	16	5	10	**3,29**
G29205	3/4"	27	18	6	10	**5,64**
G29206	1"	34	20	7	5	**10,61**

292-OC

14RACOC

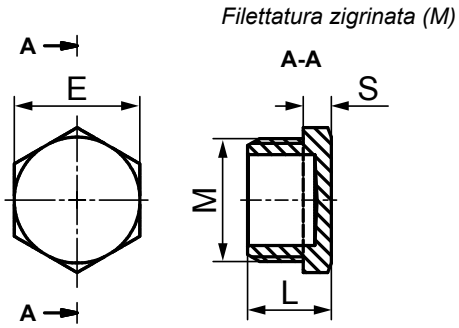

Chromium plated hexagonal plug with M thread

• Material: brass CW614N

CHARACTERISTICS:conforming to the transport of drinking water according to DM 174 04/06/04.
USE: suitable for connecting two pipes.

CODICE	M	E [mm]	L [mm]	S [mm]		€ Each
L29203	3/8"	18	13,5	5	10	**4,15**
L29204	1/2"	21	16	5	10	**4,64**
L29205	3/4"	27	18	6	10	**6,86**
L29206	1"	34	20	7	5	**13,96**

Oteraccordi S.p.A. reserves the right to change the information contained in this catalogue without notice.

300-O

13RACOT

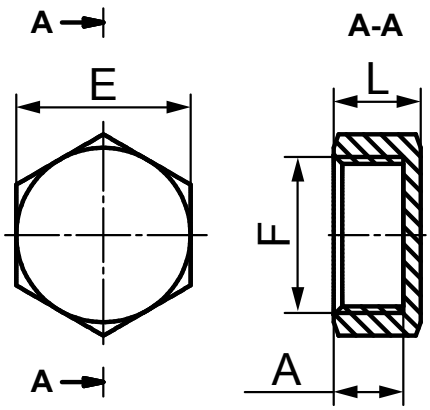

Hexagonal plug with F thread

- Material: brass CW614N

CHARACTERISTICS:conforming to the transport of drinking water according to DM 174 04/06/04.
USE: suitable for connecting two pipes.

CODICE	F	A [mm]	E [mm]	L [mm]		€ Each
G30003	3/8"	10	21	13	10	3,29
G30004	1/2"	12	24	15	10	3,29
G30005	3/4"	12	30	15	10	5,06
G30006	1"	12,5	38	15	5	7,85
G30008	1.1/2"	15	52	18	5	16,72
G30007	1.1/4"	13	46	16	5	12,37
G30009	2"	18	65	20	5	36,69

300-OC

14RACOC

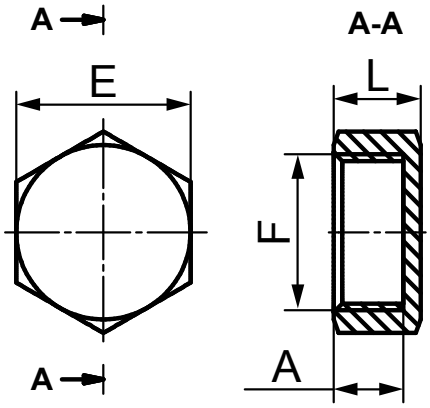

Chromium plated hexagonal plug with F thread

- Material: brass CW614N

CHARACTERISTICS:conforming to the transport of drinking water according to DM 174 04/06/04.
USE: suitable for connecting two pipes.

CODICE	F	A [mm]	E [mm]	L [mm]		€ Each
L30003	3/8"	10	21	13	10	4,28
L30004	1/2"	12	21	15	10	4,79
L30005	3/4"	12	30	15	10	6,58
L30006	1"	12,5	38	15	5	10,21

Oteraccordi S.p.A. reserves the right to change the information contained in this catalogue without notice.

310-O

13RACOT

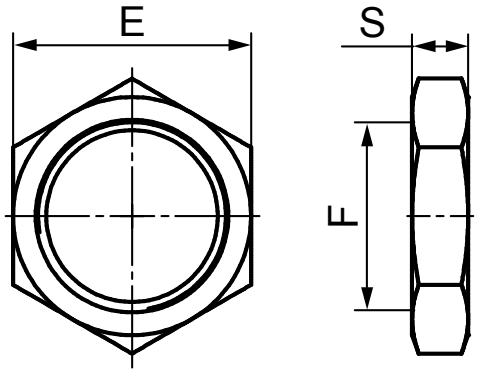

Locknut

• Material: brass CW614N

CHARACTERISTICS:conforming to the transport of drinking water according to DM 174 04/06/04.
USE: suitable for connecting two pipes.

CODICE	F	E [mm]	S [mm]		€ Each
G31003	3/8"	24	6	10	2,24
G31004	1/2"	25	5	10	2,86
G31005	3/4"	30	5	10	3,54
G31006	1"	37	6	5	4,85
G31007	1.1/4"	46	8	5	20,81
G31008	1.1/2"	53	8	5	32,40
G31009	2"	65	8	5	39,66

310-OC

14RACOC

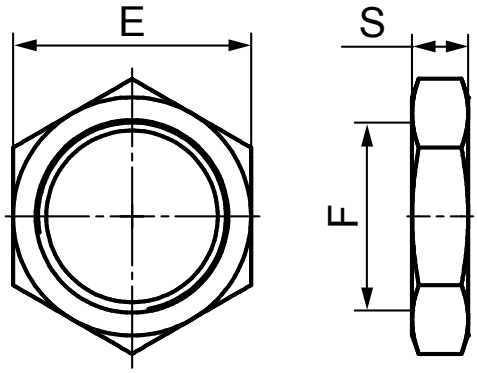

Chromium plated locknut

• Material: brass CW614N

CHARACTERISTICS:conforming to the transport of drinking water according to DM 174 04/06/04.
USE: suitable for connecting two pipes.

CODICE	F	E [mm]	S [mm]		€ Each
L31003	3/8"	24	6	10	2,56
L31004	1/2"	25	5	10	3,93
L31005	3/4"	30	5	10	4,63
L31006	1"	37	6	5	5,94

Oteraccordi S.p.A. reserves the right to change the information contained in this catalogue without notice.

344F-O

13RACOT

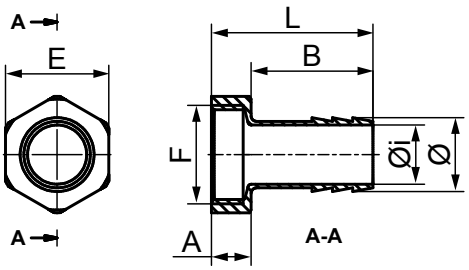

Hose connector with F thread

- Material: brass CW614N

CHARACTERISTICS:conforming to the transport of drinking water according to DM 174 04/06/04.
USE: suitable for connecting two pipes.

CODICE	FxØ	A [mm]	B [mm]	E [mm]	L [mm]	Øi [mm]	NOTE		€ Each
G344F2	1/2"x10	13	24	23	38	6	GPL	10	**8,59**
G344F6	3/4"x20	8	34	28	44	16	-	5	**14,45**
G344F7	3/4"x25	8	34	28	44	21	-	5	**14,22**

344F-OC

14RACOC

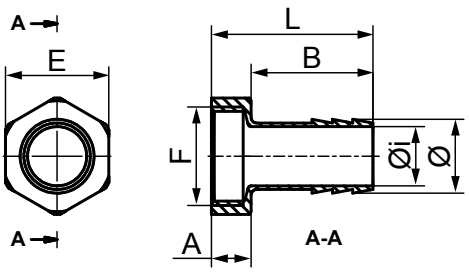

Chromium plated hose connector with F thread

- Material: brass CW614N

CHARACTERISTICS:conforming to the transport of drinking water according to DM 174 04/06/04.
USE: suitable for connecting two pipes.

CODICE	FxØ	A [mm]	B [mm]	E [mm]	L [mm]	Øi [mm]	NOTE		€ Each
L344F2	1/2"x10	13	24	23	38	6	GPL	10	**9,38**
L344F6	3/4"x20	8	34	28	44	16	-	5	**12,27**
L344F7	3/4"x25	8	34	28	44	21	-	5	**15,29**

Oteraccordi S.p.A. reserves the right to change the information contained in this catalogue without notice.

344M-O

13RACOT

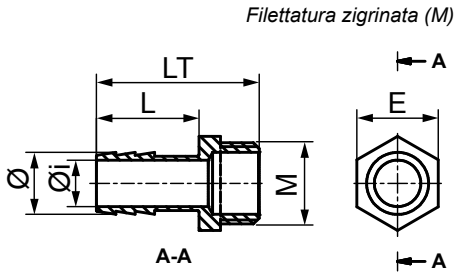

Hose connector with M thread

• Material: brass CW614N

CHARACTERISTICS:conforming to the transport of drinking water according to DM 174 04/06/04.
USE: suitable for connecting two pipes.

CODICE	MxØ	E [mm]	L [mm]	LT [mm]	Øi [mm]	NOTE		€ Each
G34401	3/8"x10	18	27	40	6	GPL	10	**5,13**
G34402	1/2"x10	21	26,5	42	6	GPL	10	**8,13**
G34403	1/2"x12	21	26,5	42	8	-	10	**8,13**
G34404	1/2"x16	21	26,5	42	12	-	10	**8,81**
G34405	1/2"x20	21	26,5	42	16	-	10	**8,81**
G34406	3/4"x20	27	32,5	48	16	-	5	**9,56**
G34407	3/4"x25	27	32,5	48	19,5	-	5	**12,83**
G34408	1"x25	32	34,5	54,5	20	-	5	**14,22**
G34409	1"x30	32	34,5	54,5	25,5	-	5	**16,27**
G34410	1.1/4"x35	38	38	59	30,5	-	5	**23,95**
G34411	1.1/2"x40	45	42,5	67	34,8	-	5	**32,55**
G34412	2"x50	55,5	74	46	44	-	5	**54,44**

Oteraccordi S.p.A. reserves the right to change the information contained in this catalogue without notice.

344M-OC

14RACOC

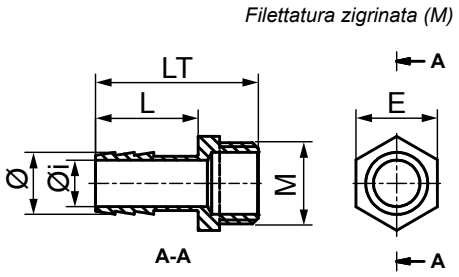

Chromium plated Hose connector with M thread

- Material: brass CW614N

CHARACTERISTICS:conforming to the transport of drinking water according to DM 174 04/06/04.
USE: suitable for connecting two pipes.

CODICE	MxØ	E [mm]	L [mm]	LT [mm]	Øi [mm]	NOTE		€ Each
L34401	3/8"x10	18	27	40	6	GPL	10	**6,94**
L34402	1/2"x10	21	26,5	42	6	GPL	10	**6,75**
L34403	1/2"x12	21	26,5	42	8	-	10	**6,75**
L34404	1/2"x16	21	26,5	42	12	-	10	**7,81**
L34405	1/2"x20	21	26,5	42	16	-	10	**8,40**
L34406	3/4"x20	27	32,5	48	16	-	5	**10,57**
L34407	3/4"x25	27	32,5	48	19,5	-	5	**13,92**

Oteraccordi S.p.A. reserves the right to change the information contained in this catalogue without notice.

529-O

13RACOT

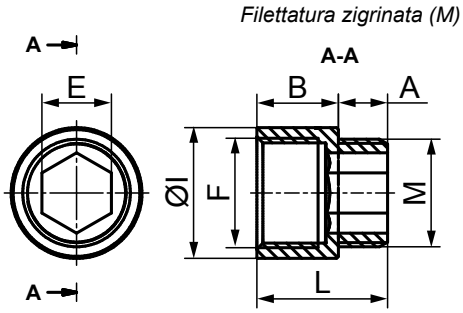

Socket with M-F thread

- Material: brass CW614N

CHARACTERISTICS:conforming to the transport of drinking water according to DM 174 04/06/04.
USE: suitable for connecting two pipes.

CODICE	M/FxB [mm]	A [mm]	E [mm]	L [mm]	ØI [mm]		€ Each
G52902	3/8"x10	10	10	20	23	10	4,05
G52903	3/8"x15	10	10	25	23	10	4,05
G52904	3/8"x20	10	10	30	23	10	6,41
G52905	3/8"x25	10	10	35	23	10	6,48
G52906	3/8"x30	10	10	40	23	10	7,85
G52908	3/8"x40	10	10	50	23	10	9,51
G52909	3/8"x50	10	10	60	23	10	10,93
G52910	1/2"x10	11	12	21	27	10	4,39
G52911	1/2"x15	11	12	26	27	10	5,27
G52912	1/2"x20	11	12	31	27	10	6,33
G52913	1/2"x25	11	12	36	27	5	8,37
G52914	1/2"x30	11	12	41	27	5	8,28
G52916	1/2"x40	11	12	51	27	5	10,69
G52917	1/2"x50	11	12	61	27	5	13,10
G52933	1/2"x60	11	12	71	27	5	15,07
G52934	1/2"x70	11	12	81	27	5	18,07
G52935	1/2"x80	11	12	91	27	5	19,60
G52936	1/2"x100	11	12	111	27	5	23,83
G52918	3/4"x10	12	17	22	32	5	5,74
G52919	3/4"x15	12	17	27	32	5	6,75
G52920	3/4"x20	12	17	32	32	5	7,85
G52921	3/4"x25	12	17	37	32	5	9,03
G52922	3/4"x30	12	17	42	32	5	10,39
G52924	3/4"x40	12	17	52	32	5	12,81
G52925	3/4"x50	12	17	62	32	5	16,21
G52937	3/4"x60	12	17	72	32	5	18,10
G52938	1"x10	15	22	25	38	5	9,03
G52926	1"x15	15	22	30	38	5	9,78
G52927	1"x20	15	22	35	38	5	11,26
G52928	1"x25	15	22	40	38	5	12,07
G52929	1"x30	15	22	45	38	5	15,07
G52930	1"x40	15	22	55	38	5	18,10
G52931	1"x50	15	22	65	38	5	21,10
G52939	1"x60	15	22	75	38	5	24,12

Oteraccordi S.p.A. reserves the right to change the information contained in this catalogue without notice.

529-OC

14RACOC

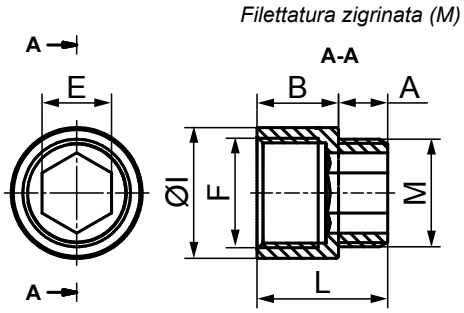

Chromium plated socket with M-F thread

- Material: brass CW614N

CHARACTERISTICS:conforming to the transport of drinking water according to DM 174 04/06/04.
USE: suitable for connecting two pipes.

CODICE	M/FxB [mm]	A [mm]	E [mm]	L [mm]	ØI [mm]		€ Each
L52902	3/8"x10	10	10	20	23	10	5,15
L52903	3/8"x15	10	10	25	23	10	6,48
L52904	3/8"x20	10	10	30	23	10	7,47
L52905	3/8"x25	10	10	35	23	10	8,28
L52906	3/8"x30	10	10	40	23	10	8,93
L52908	3/8"x40	10	10	50	23	10	10,57
L52909	3/8"x50	10	10	60	23	10	11,98
L52910	1/2"x10	11	12	21	27	10	6,58
L52911	1/2"x15	11	12	26	27	5	8,55
L52912	1/2"x20	11	12	31	27	5	9,30
L52913	1/2"x25	11	12	36	27	5	17,27
L52914	1/2"x30	11	12	41	27	5	19,08
L52916	1/2"x40	11	12	51	27	5	21,88
L52917	1/2"x50	11	12	61	27	5	26,34
L52933	1/2"x60	11	12	71	27	5	28,08
L52934	1/2"x70	11	12	81	27	5	28,39
L52935	1/2"x80	11	12	91	27	5	29,08
L52936	1/2"x100	11	12	111	27	5	36,70
L52918	3/4"x10	12	17	22	32	5	9,03
L52919	3/4"x15	12	17	27	32	5	10,58
L52920	3/4"x20	12	17	32	32	5	12,27
L52921	3/4"x25	12	17	37	32	5	14,32
L52922	3/4"x30	12	17	42	32	5	18,11
L52924	3/4"x40	12	17	52	32	5	24,62
L52925	3/4"x50	12	17	62	32	5	22,87
L52937	3/4"x60	12	17	72	32	5	23,35
L52938	1"x10	15	22	25	38	5	18,92
L52926	1"x15	15	22	30	38	5	21,13
L52927	1"x20	15	22	35	38	5	24,37
L52928	1"x25	15	22	40	38	5	25,60
L52929	1"x30	15	22	45	38	5	27,25
L52930	1"x40	15	22	55	38	5	27,88
L52931	1"x50	15	22	65	38	5	30,90
L52939	1"x60	15	22	75	38	5	39,92

Oteraccordi S.p.A. reserves the right to change the information contained in this catalogue without notice.

531-O

13RACOT

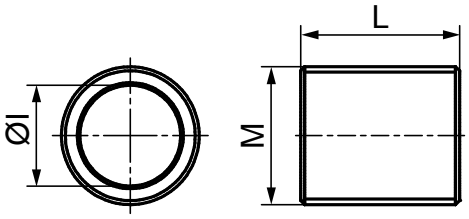

Screw with M thread

- Material: brass CW614N

CHARACTERISTICS:conforming to the transport of drinking water according to DM 174 04/06/04.
USE: suitable for connecting two pipes.

CODICE	M	L [mm]	ØI [mm]		€ Each
G53103	3/8"	22	11	10	**4,51**
G53104	1/2"	30	15	10	**6,74**
G53105	3/4"	30	19	10	**9,39**
G53106	1"	35	26	5	**13,39**

Oteraccordi S.p.A. reserves the right to change the information contained in this catalogue without notice.

630-O

13RACOT

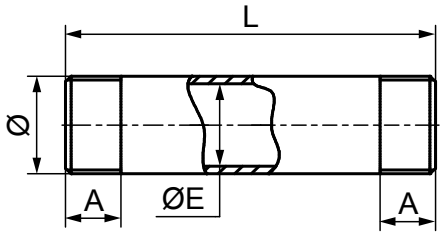

Threaded extension M-M

- Material: brass CW614N

CHARACTERISTICS:conforming to the transport of drinking water according to DM 174 04/06/04.
USE: suitable for connecting two pipes.

CODICE	ØxL [mm]	A [mm]	ØE [mm]	✉	€ Each
G63024	1/2"x80	11	15	20	**10,67**
G63025	1/2"x100	15	15	20	**13,00**
G63027	1/2"x150	15	15	20	**18,84**
G63028	1/2"x200	15	15	20	**24,70**
G63054	1.1/4"x80	13	34	20	**26,25**
G63057	1.1/4"x150	20	34	20	**47,03**
G63058	1.1/4"x200	20	34	10	**61,82**
G63062	1.1/2"x60	16	40	10	**23,31**
G63064	1.1/2"x80	16	40	10	**30,25**
G63066	1.1/2"x120	20	40	10	**43,88**
G63067	1.1/2"x180	20	40	10	**64,42**
G63072	2"x60	16	50	10	**28,89**
G63074	2"x80	16	50	10	**37,45**
G63076	2"x120	22	50	10	**54,60**
G63078	2"x200	22	50	5	**88,85**

N.B. Items available till stocks last

Oteraccordi S.p.A. reserves the right to change the information contained in this catalogue without notice.

632-O

13RACOT

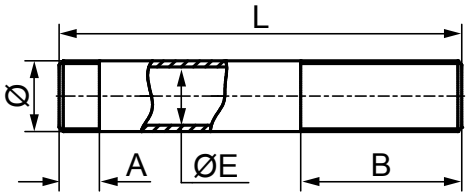

Threaded extension M-M

• Material: brass CW614N

CHARACTERISTICS:conforming to the transport of drinking water according to DM 174 04/06/04.
USE: suitable for connecting two pipes.

CODICE	ØxL [mm]	AxB[mm]	ØE [mm]		€ Each
G63225	1/2"x100	15x50	15	20	**13,00**
G63227	1/2"x150	15x60	15	20	**18,84**
G63228	1/2"x200	15x60	15	20	**24,70**

N.B. Items available till stocks last

698-O

13RACOT

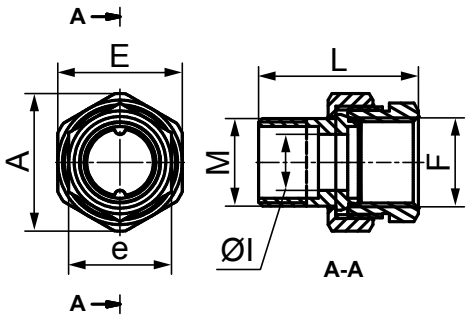

Pipe union with o-ring and M-F thread

• Material: brass CW614N

CHARACTERISTICS:conforming to the transport of drinking water according to DM 174 04/06/04.
USE: suitable for connecting two pipes.

CODICE	MxF	A [mm]	E [mm]	L [mm]	e [mm]	ØI [mm]		€ Each
G69804	1/2"x1/2"	34	30	46	26	15	3	**16,72**
G69805	3/4"x3/4"	41	37	50	32	19,5	3	**24,48**
G69806	1"x1"	52	47	54	39	25,5	3	**35,59**
G69807	1.1/4"x1.1/4"	59	52	71	49	32,5	3	**55,55**
G69808	1.1/2"x1.1/2"	68	64	74,5	54	29,5	2	**92,73**
G69809	2"x2"	87	81	99	67	49,5	2	**183,14**

Oteraccordi S.p.A. reserves the right to change the information contained in this catalogue without notice.

699-O

13RACOT

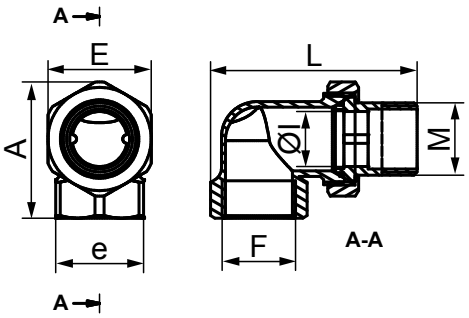

90° Pipe union with o-ring and M-F thread

- Material: brass CW614N

CHARACTERISTICS:conforming to the transport of drinking water according to DM 174 04/06/04.
USE: suitable for connecting two pipes.

CODICE	MxF	A [mm]	E [mm]	L [mm]	e [mm]	ØI [mm]		€ Each
G69904	1/2"x1/2"	62	27	63	30	14	3	**22,85**
G69905	3/4"x3/4"	78	37	77	32	20	3	**33,36**
G69906	1"x1"	94	47	94	40	25	3	**50,55**
G69907	1.1/4"x1.1/4"	66	52	104	50	33	3	**84,98**
G69908	1.1/2"x1.1/2"	75	56	118	64	39	2	**133,24**
G69909	2"x2"	112	81	152	69	49	2	**249,74**

Oteraccordi S.p.A. reserves the right to change the information contained in this catalogue without notice.

note

note

Art.	Pag.
90-O	321
90-OC	321
92-O	322
92-OC	322
100-B5-42	243
100-B5-42-4S	246
100-B5-42-5	247
100-B5-42-5S	247
100-B5-48	243
100-B5-56	244
100-B9-42	244
100-B9-42-4S	246
100-B9-42-5	248
100-B9-48	245
100-B9-56	245
100-C	248
100-V	250
100-VG	251
100-Z	252
110-01	71
110-02	72
110-03	73
110-04	74
110-05	75
111-01	76
111-02	76
111-03	77
111-04	77
111-05	78
111-C	249
111-V	253
111-VG	253
111-Z	254
112-01	78
113-01	79
114-01	79
115	254
115-01	80
115-02	80
115-03	81
115-04	81
119-01	82
119-02	82
119-03	83
120-01	96
120-02	96
120-03	97
120-04	97
121-01	98
121-02	98
121-03	99
121-04	99
121-05	100
122-01	100
122-02	101
122-03	101
122-N	255
122-Z	255
123-01	102
123-02	102
124-01	103
124-02	103

Art.	Pag.
124-03	104
124-04	104
125-01	105
126-01	105
127-01	106
127-02	106
127-03	107
130-01	89
130-02	90
130-03	91
130-04	92
130-10	93
130-11	94
130-12	95
130-O	323
130-OC	323
133-C	256
133-E.A	256
133-EPDM	257
133-S	257
140-01	107
140-02	108
140-03	108
140-04	109
140-05	109
141-01	110
141-02	110
141-03	111
142-01	111
143-01	112
143-02	112
143-03	113
143-04	113
143-05	114
143-06	114
143-07	115
144-01	115
144-02	116
144-03	116
144-04	117
144-05	117
144-06	118
144-07	118
145	258
145-01	119
146	258
146-01	119
147	260
147-01	120
147-02	120
147-03	121
148	261
148-01	122
148-02	123
148-03	123
149	259
149-01	124
149-02	124
149-03	125
149-04	125
149-05	126
149-06	126

Art.	Pag.
149-07	127
149-08	128
149-09	129
149-10	127
149-11	129
149-12	130
149-13	131
149-14	132
150	259
151	260
160-01	137
160-02	138
160-03	139
160-04	140
161-01	141
162-01	141
163-01	142
164-01	142
169-01	143
169-02	143
170-01	149
170-02	150
171-01	151
171-02	151
172-01	152
173-01	152
177-01	153
178-01	154
179-01	155
179-02	155
179-03	156
179-04	156
180-O	324
223-O	324
223-OC	325
240-O	325
240-OC	326
240-Z	265
241-O	327
241-OC	328
241-Z	266
245-O	329
245-OC	330
245-Z	267
246-I	268
246-O	330
246-OC	331
246-Z	269
247-OC	331
268	271
268-O	332
268-OC	332
268-SP	274
269	270
270	273
271	272
280-O	333
280-OC	333
280-Z	274
290-Z	275
292-O	334
292-OC	334

Art.	Pag.
292-Z	275
300-O	335
300-OC	335
300-Z	276
310-O	336
310-OC	336
310-Z	277
344F-O	337
344F-OC	337
344M-O	338
344M-OC	339
402-V	203
402-Z	203
403-V	204
404-V	204
404-Z	205
406-V	205
408-V	206
410-V	206
414-V	207
414-V-S	207
414-Z	208
414-Z-S	208
415-V	209
415-V-S	209
415-Z	210
415-Z-S	210
416-V	211
417-IN	181
417-SA	182
417-ST	183
418	211
418-P	212
419	163
420	163
430	164
431	164
440	165
441	165
450	161
451	162
460-FT	167
460-I	166
460-O	166
470-O	167
480-N	168
490-01	168
490-BASE	169
490-BIDET	170
490-PLUS	169
490-WC	170
491	171
491-CG	184
492-OR	185
492-WC	185
493-01	187
493-BD	186
493-WC	187
494-01	188
494-02	188
494-03	189
494-04	190

Art.	Pag.
494-05	190
494-06	191
494-07	192
494-10	193
494-14	193
494-15	194
494-16	191
494-17	192
494-18	194
494-22	189
495-CG	195
495-CG DS	196
495-MT	171
495-MT-DS	172
496-04	173
496-08	174
496-BD/WC	173
497-BD	175
497-LV	176
497-WC	174
497-WCGE	175
501	212
503	213
529-O	340
529-OC	341
529-Z	278
531-O	342
531-Z	279
630-O	343
630-Z	282
631	280
632-O	344
632-Z	285
650-N	286
698-O	344
699-O	345
700	291
720	292
730	293
740	294
750/90°	296
751/90° SS	297
770	298
800	9
805	10
806	12
806-01	13
806-02	13
806-T	12
810	14
811	15
811-01	15
812-I	59
812-I-01	59
813	16
820	11
821	11
825	17
826-I	60
828	18
829	20
830	19

Art.	Pag.
831	21
832-I	61
832-IG	63
833-G	24
834	23
835	20
837-I	62
837-IG	64
838-G	25
839	30
840	16
843	26
846	27
848	28
849	29
850	31
851	32
855-A	46
855-I	65
855-Z	45
857-I	66
857-Z	44
858	51
859	51
860	33
880	35
881-I	65
882	33
883	34
890	22
914	45
920	46
959-V	217
960-V	217
961-V	218
1000	36
1001	38
1015	48
1015-01	48
1020	47
1025	47
1025-I	66
1030	37
1031	39
1040	37
1041	40
1045	49
1050	50
2000	41
2030	42
2040	43
5000	223
5000-01	224
5000-03	224
5030	225
5030-I	226
5040	227
5040-01	228
5120	229
5120-01	230
5200	231
5201	232

Art.	Pag.
5202	233
5203	234
5204-L	235
5205-L	236
5420-01	197
5420-01	237
5420-01-TOOL	198
5420-01-TOOL	238
7000	315
7001	316
EN 1092-1/01/A PN06	303
EN 1092-1/01/A PN10	304
EN 1092-1/01/A PN16	305
EN 1092-1/05/A PN06	306
EN 1092-1/05/A PN10	307
EN 1092-1/05/A PN16	308
EN 1092-1/11/B1 PN06	309
EN 1092-1/11/B1 PN10	310
EN 1092-1/11/B1 PN16	311
EN 1092-1/11/B1 PN40	312
EN 1092-1/13/A PN06	313
EN 1092-1/13/A PN10/16	314

note

Working range [mm]

Radiator's column

[mm] Diameter [mm]

[inch] Diameter ["]

mm Hole diameter [mm]

mm Axes distance

[m] Meter for reel

[mm] Section [mm]

mm Profile section [mm]

mm Thickness [mm]

CG mm Plaster thickness [mm]

Clamp bolt

Threaded rod Ø x L [mm]

mm Bracket lenght [mm]

Bracket model

Double threaded sces Ø x L [mm]

Dowel Ø X L [mm]

Screw Ø X L [mm]

Screw Ø X L [mm]

B B Bags per box

C Pair per bag

C C Pair per box

Pcs per bag

Pieces bag/box

Pcs per box

[pz] Pcs per bunch

Pcs per pallet

Vertical load [Kg]

Horizontal load [Kg]

Nm Torque [Nm]

kg Weight in kilograms

Sales conditions mentioned below are applied to all sales agreements between Oteraccordi S.p.A (hereinafter the "Company") and the Buyer who places an order either directly to the Company or through the sales agent representing the Company itself.
Sales conditions are therefore accepted by the Buyer without reservation even if not undersigned by the Buyer itself.
Any clause included by the buyer into the orders sent to the Company not in accordance with sales conditions, will not be considered.

ORDERS

Orders have to be considered as valid only if confirmed through a proforma invoice sent by the Company to the buyer.
Oteraccordi S.p.A is entitled to require further information before accepting the order.
Minimum order value is € 500,00.

PRICES

Prices included in the Company price list are subject to the raw material and labor changes costs.
Prices and payment conditions are indicated in the proforma invoice and in the final invoice and they are binding for the Buyer.

DELIVERY CONDITIONS

Delivery time is only indicative and a possible delay does not entitle the Buyer to cancel the order.

TRANSPORT CONDITIONS

The goods is delivered to the Buyer according EXW (Ex works) conditions or in accordance with previously agreed Incoterms.

CLAIMS

Any claim must be noticed by written communication within eight days from receipt of goods in accordance with art.1495 of Civil Code of Italian Law.

RETURNED GOOD

Returned goods is not accepted if not previously agreed with the Company Oteraccordi S.p.A.

TERMS OF PAYMENT

Payment must be made within the agreed terms indicated in invoice. Any delayed payment enables us to suspend , without notice, any ongoing supply.
The goods will remain property of the Company until the whole payment of the invoice.

WARRANTY

In accordance with Vienna Convention dated 1980, the warranty period is established in two years from date of delivery (art.39).

COURT

The competent law court is Bergamo.
For any aspect not provided by sales conditions, relationship between Oteraccordi S.p.A. and the Buyer will be regulated by Italian law.

note

CATALOGUE PRICE LIST 2023 n. 128

OTER FIX
AQUA OTER
OTER FORGING

OTER®
HYDRAULIC & FIXING SYSTEM

oterspa.it

Oteraccordi SpA
Via Bisone, 21
24034 Cisano Bergamasco (BG)
Tel. +39 035 78.23.42
Fax +39 035 78.36.22
info@oterspa.it - www.oterspa.it